## ■ PRODUCT CHARACTERISTICS

| | |
|---|---|
| VR(@IC=0.5mA) | 45V |
| VF(Typ@IF=5A) | 0.53V |
| IR(@VR=45V) | 50uA |
| ID | 10A |

Symbol

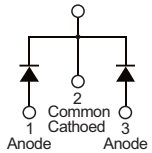


## ■ MECHANICAL CHARACTERISTICS

- Case: epoxy,molded
- Finish:all external surfaces corrosion resistant and terminal
- Leads are readily solderable
- Leads temperature for soldering purposes: 260°C Max for 10 seconds

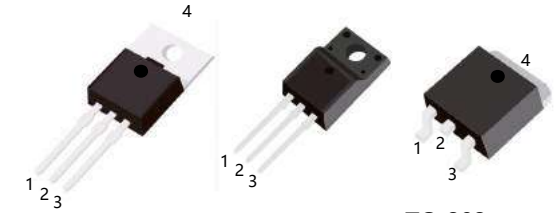


TO-220A TO-220F TO-263

## ■ FEATURES

- Guard ring for stress protection
- Low forward voltage
- Low power loss/high efficiency
- High surge capacity
- Low stored charge majority carrier conduction
- Pb free package are available

## ■ ORDER INFORMATION

| Order codes | | Package | Packing |
|---|---|---|---|
| Halogen-free | Halogen | | |
| N/A | MBR1045A | TO-220 | 50pieces/Tube |
| N/A | MBR1045F | TO-220F | 50pieces/Tube |
| N/A | MBR1045E | TO-263 | 800pieces/Reel |

## ■ MAXIMUM RATINGS (Each diode leg)

| Parameter | | Symbol | Value | Unit |
|---|---|---|---|---|
| Peak repetitive reverse voltage | | $V_{RRM}$ | 45 | V |
| Average rectified output current | Total | $I_O$ | 10 | A |
| | Per leg | | 5 | A |
| Non-repetitive peak forward surge current 8.3ms single half sine-wave superimposed on reate load | | $I_{FSM}$ | 150 | A |
| Operating and storage temperature range | | $T_J$,$T_{STG}$ | -55 to + 175 | °C |

## ■ ELECTRICAL CHARACTERISTICS

| Parameter | Symbol | Conditions | Min | Typ | Max | Unit |
|---|---|---|---|---|---|---|
| Peak repetitive reverse voltage | $B_V$ | $I_C$=0.5mA,$T_J$=25°C | 45 | - | - | V |
| Forward voltage drop | $V_F$ | $I_F$=5A, $T_J$=25°C | - | 0.53 | 0.58 | V |
| Leakage current | $I_R$ | $V_R$=45V, $T_J$=25°C | - | - | 0.05 | mA |
| | | $V_R$=45V, $T_J$=125°C | - | - | 6 | |

■ TYPICAL CHARACTERISTICS

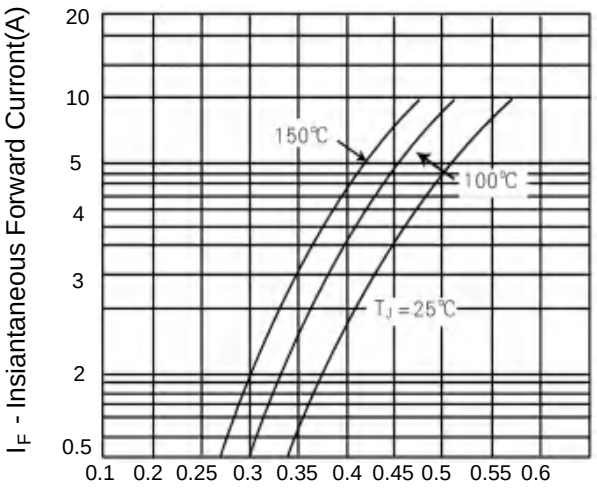


**Figure 1. Typical Forward Voltage Per Diode**

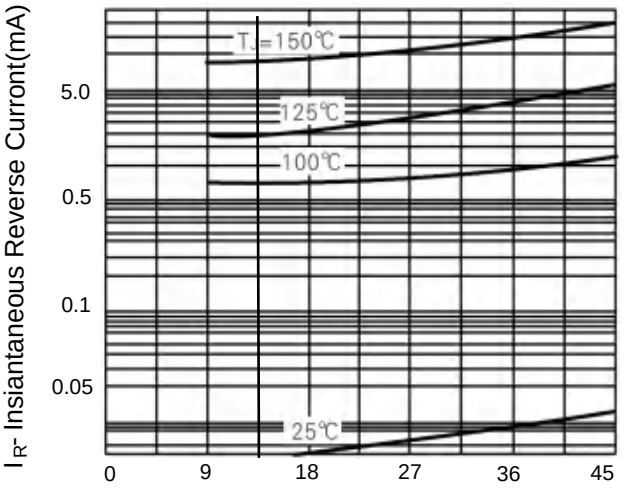


**Figure 2. Typical Reverse Current Per Diode**

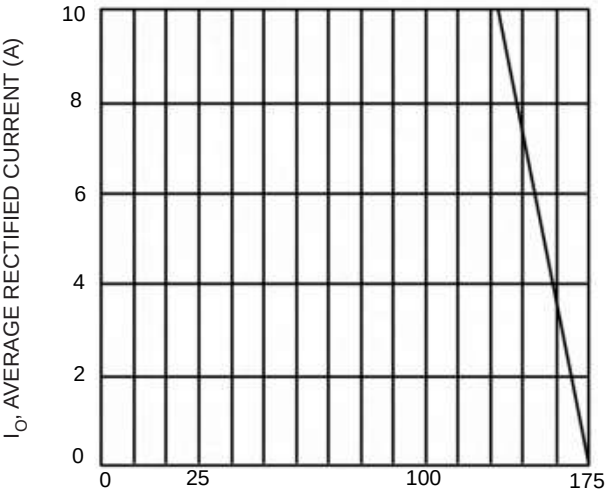


**$T_C$,CASE TEMPERATURE( °C)**

**Fig.3 Forward Current Derating Curve**

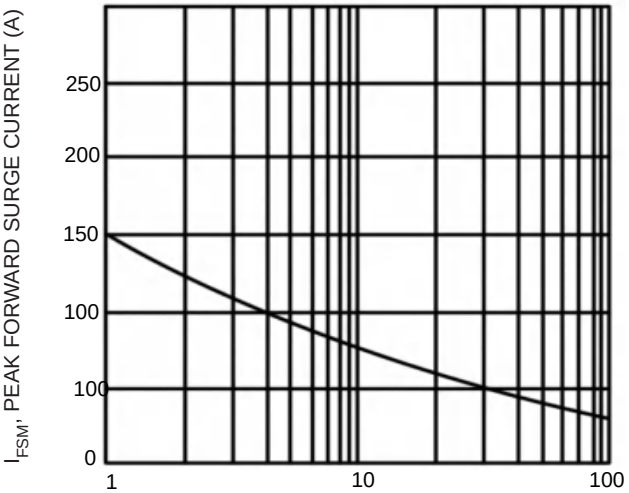


**NUMBER OF CYCLES AT 60HZ**

**Fig.4 Max Non-Repetitive Surge Current**

■ TO-220F PACKAGE OUTLINE DIMENSIONS

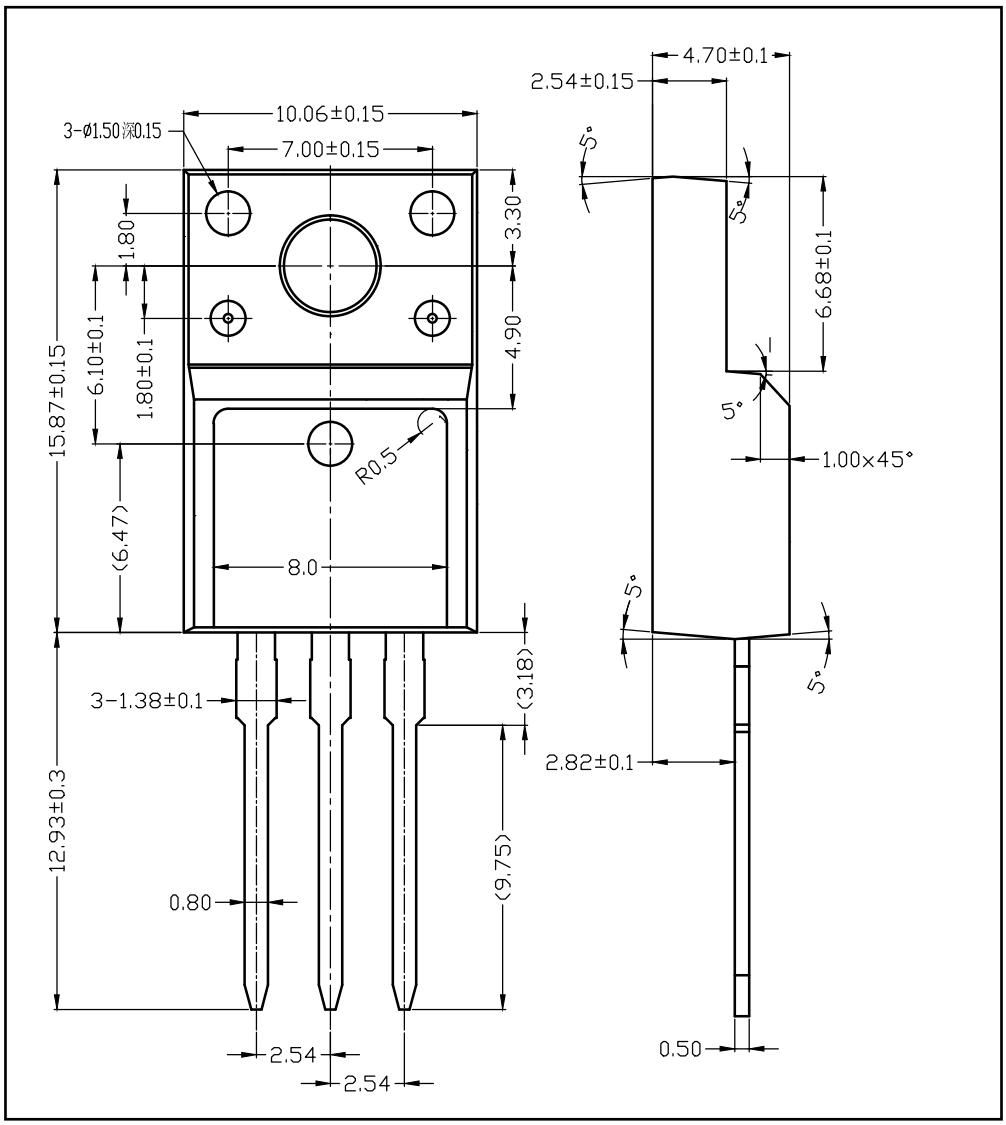

■ TO-220 PACKAGE OUTLINE DIMENSIONS

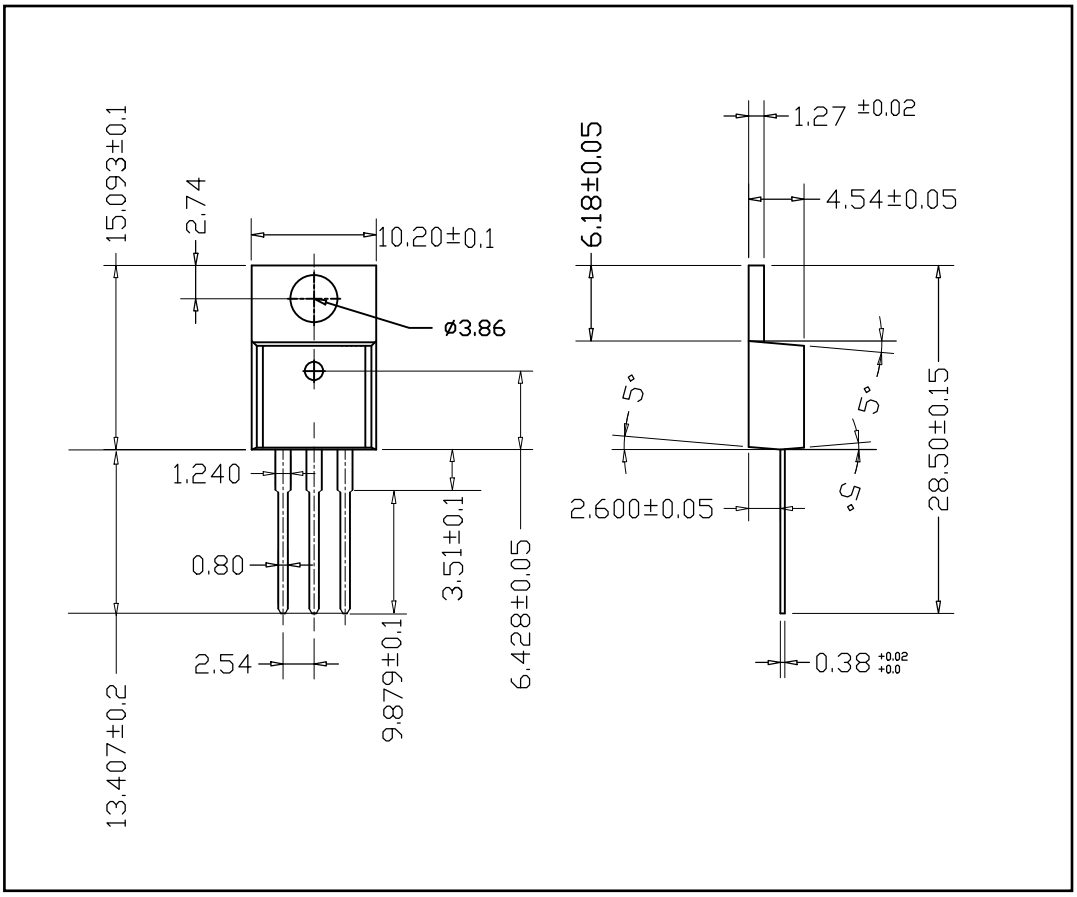
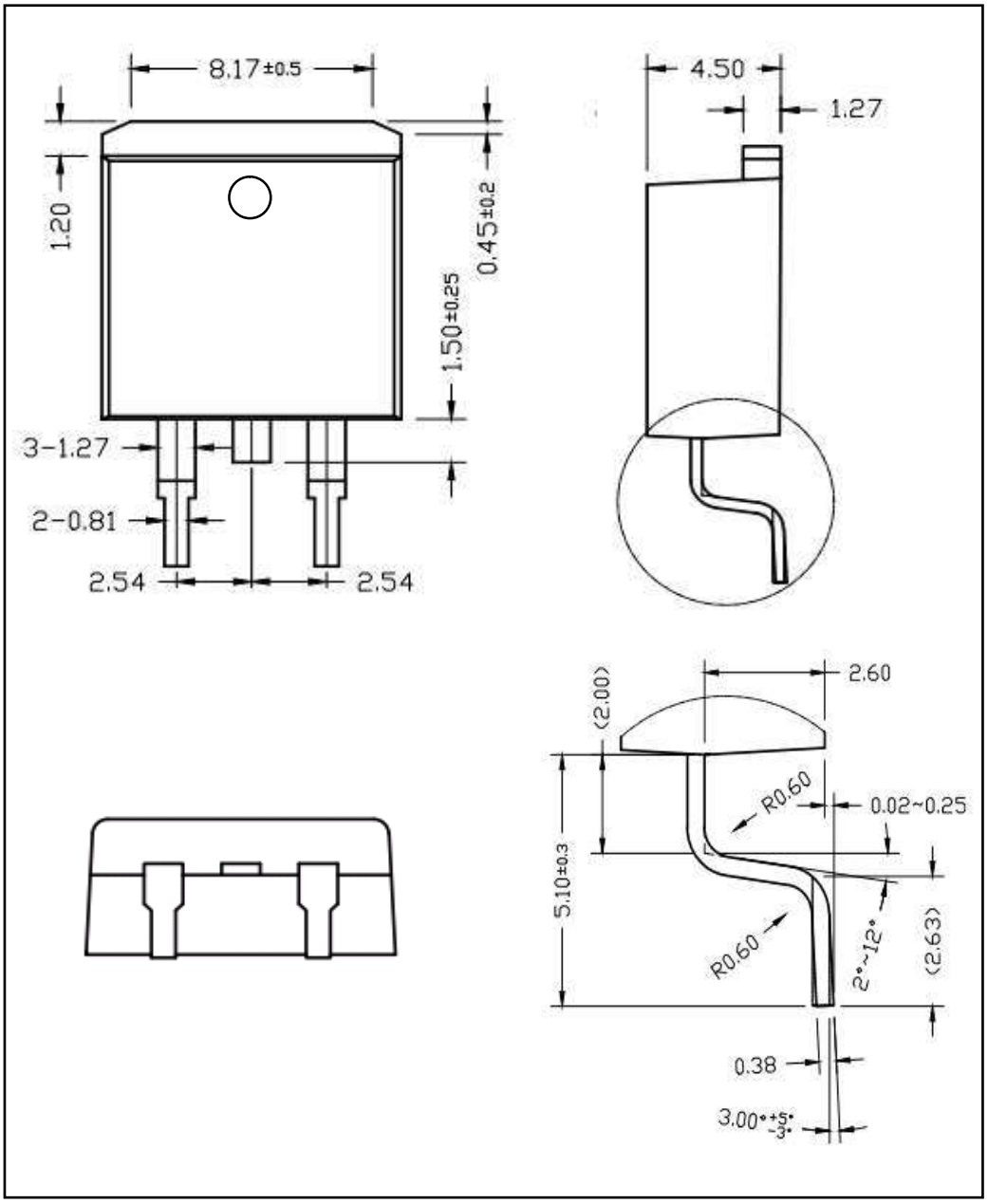
■ TO-263 PACKAGE OUTLINE DIMENSIONS