■ PRODUCT CHARACTERISTICS

VR(@IC=0.5mA)	45V
VF(Typ@IF=10A)	0.58V
IR(@VR=45V)	50uA
ID	20A

Symbol

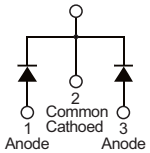

■ MECHANICAL CHARACTERISTICS

- Case: epoxy,molded
- Finish:all external surfaces corrosion resistant and terminal
- Leads are readily solderable
- Leads temperature for soldering purposes: 260°C Max for 10 seconds

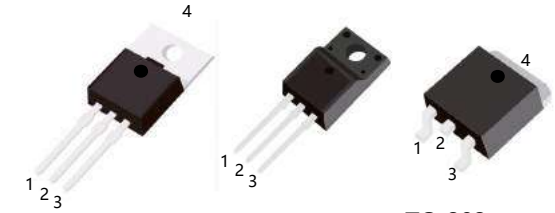

TO-220A TO-220F TO-263

■ FEATURES

- Guard ring for stress protection
- Low forward voltage
- Low power loss/high efficiency
- High surge capacity
- Low stored charge majority carrier conduction
- Pb free package are available

■ ORDER INFORMATION

Order codes		Package	Packing
Halogen-free	Halogen		
N/A	MBR2045A	TO-220	50pieces/Tube
N/A	MBR2045F	TO-220F	50pieces/Tube
N/A	MBR2045E	TO-263	800pieces/Reel

■ MAXIMUM RATINGS (Each diode leg)

Parameter		Symbol	Value	Unit
Peak repetitive reverse voltage		V_{RRM}	45	V
Average rectified output current	Total	I_O	20	A
	Per leg		10	A
Non-repetitive peak forward surge current 8.3ms single half sine-wave superimposed on reate load		I_{FSM}	200	A
Operating and storage temperature range		T_J,T_{STG}	-55 to + 175	°C

■ ELECTRICAL CHARACTERISTICS

Parameter	Symbol	Conditions	Min	Typ	Max	Unit
Peak repetitive reverse voltage	B_V	I_C=0.5mA,T_J=25°C	45	-	-	V
Forward voltage drop	V_F	I_F=10AT_J=25°C	-	0.58	0.63	V
Leakage current	I_R	V_R=45V, T_J=25°C	-	-	0.05	mA
		V_R=45V, T_J=125°C	-	-	6	

TYPICAL CHARACTERISTICS

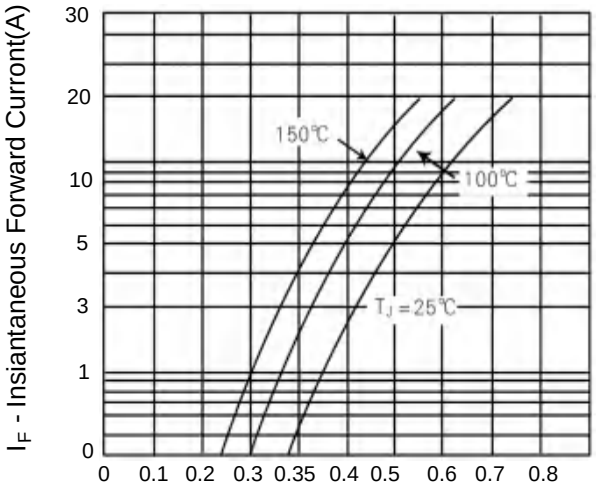

Figure 1. Typical Forward Voltage Per Diode

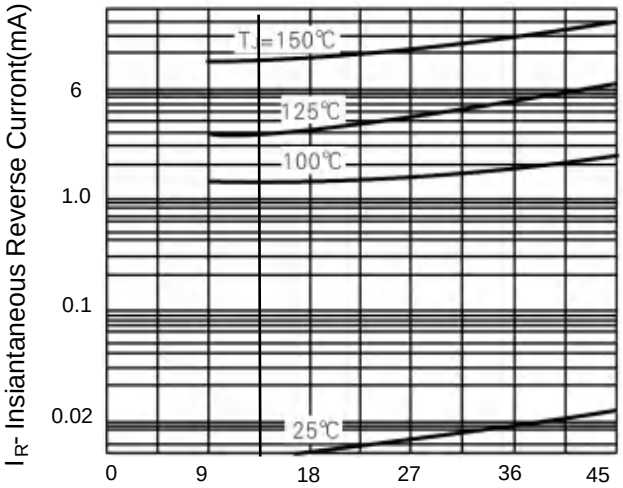

Figure 2. Typical Reverse Current Per Diode

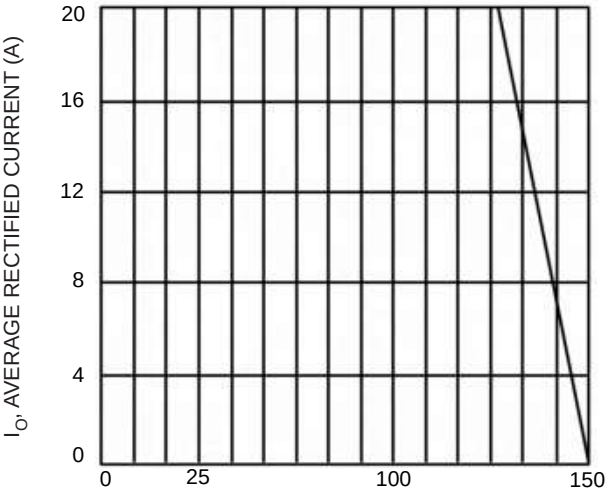

T_C,CASE TEMPERATURE(˚C)

Fig.3 Forward Current Derating Curve

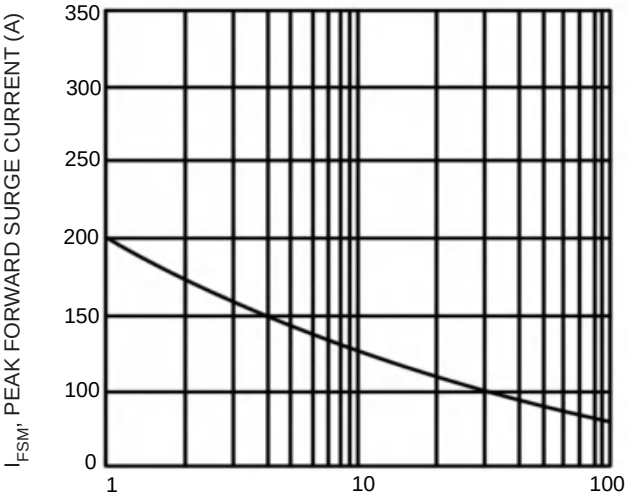

NUMBER OF CYCLES AT 60HZ

Fig.4 Max Non-Repetitive Surge Current

■ TO-220F PACKAGE OUTLINE DIMENSIONS

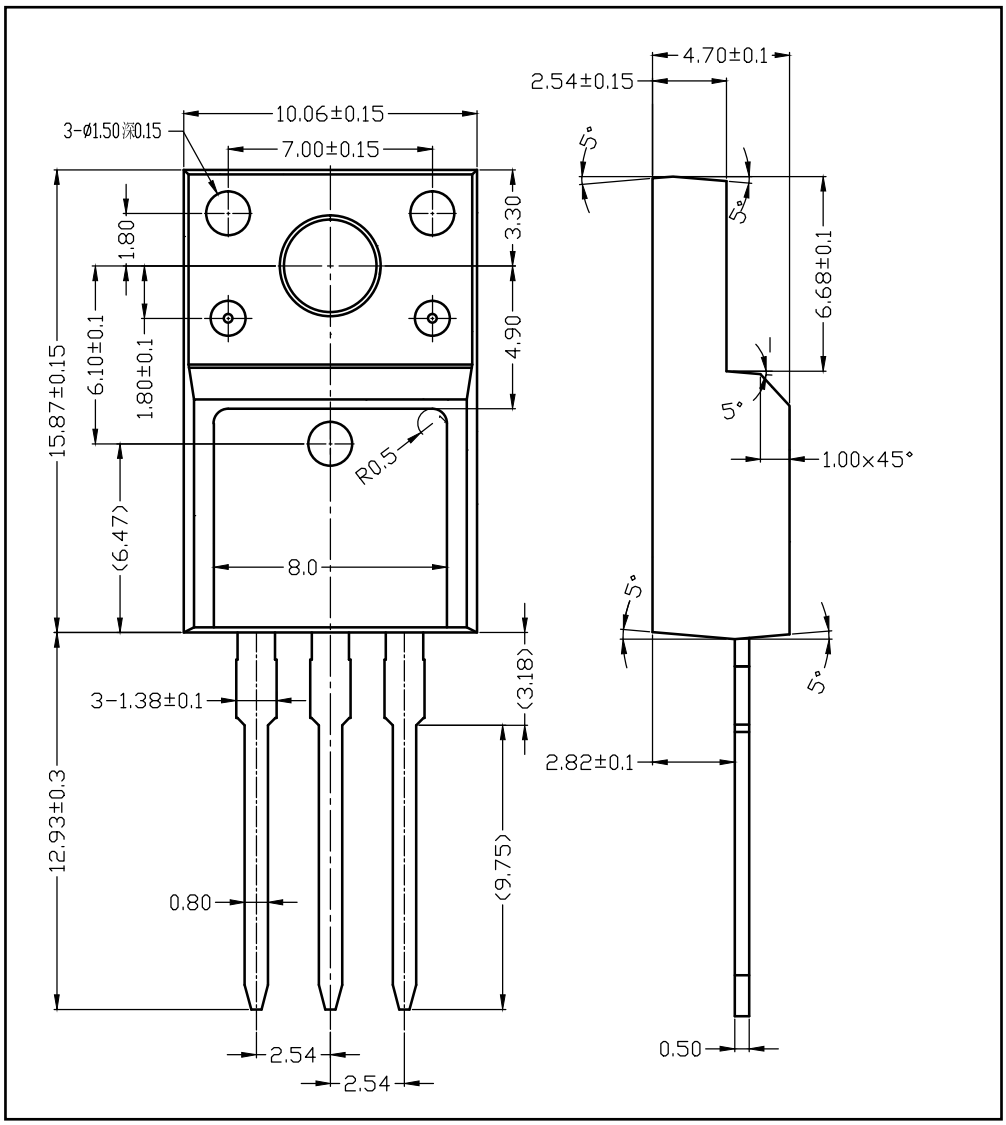

■ TO-220 PACKAGE OUTLINE DIMENSIONS

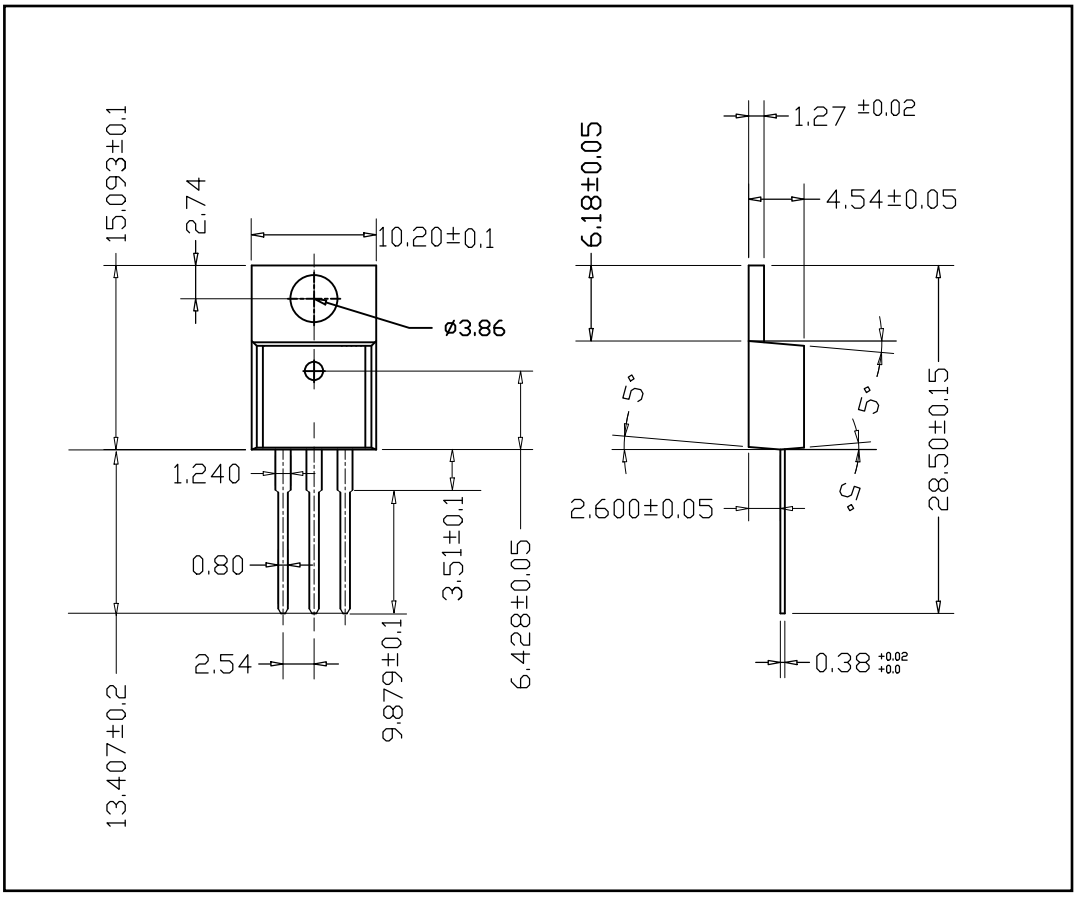
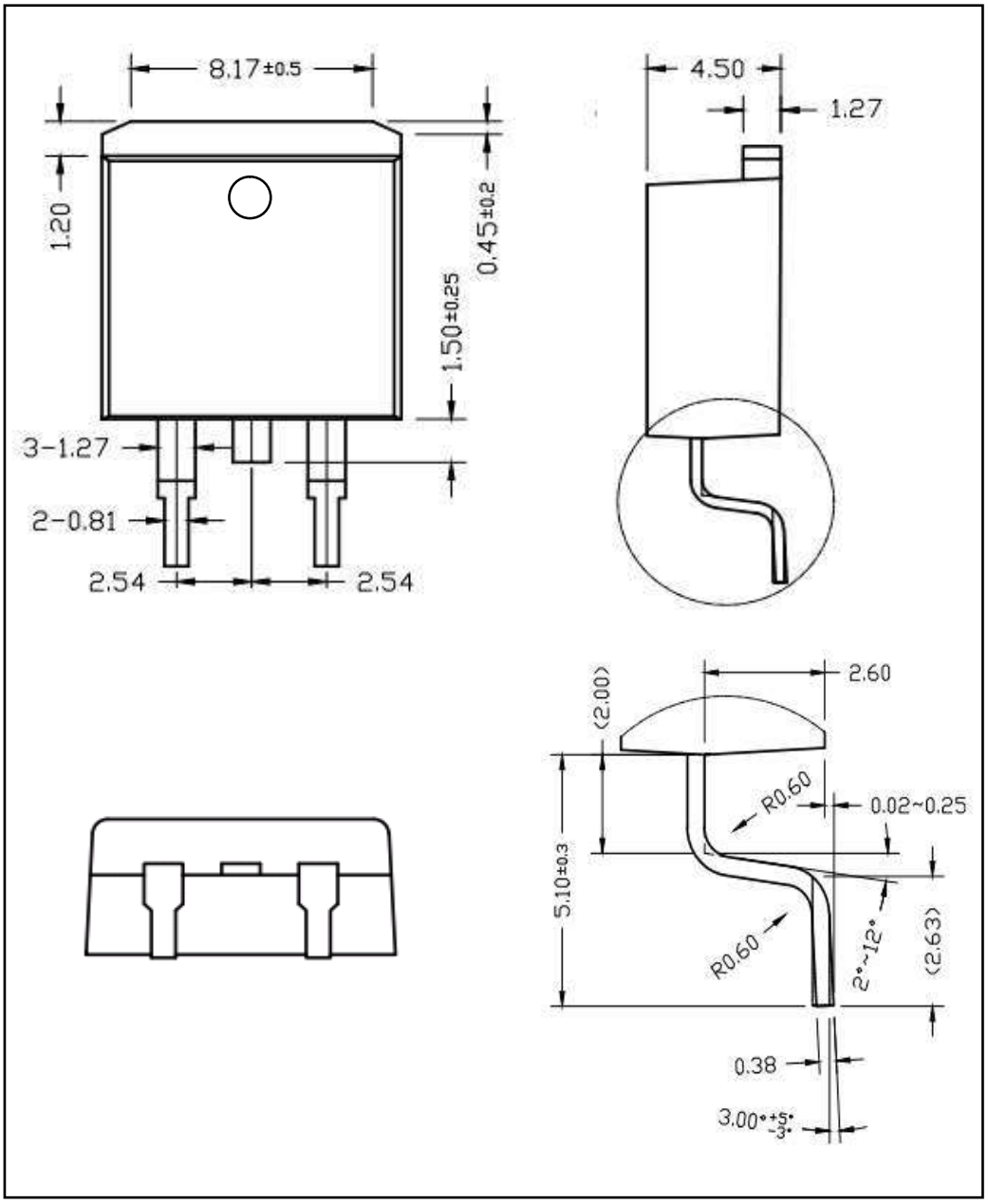
■ TO-263 PACKAGE OUTLINE DIMENSIONS