■ PRODUCT CHARACTERISTICS

VR(@IC=0.5mA)	60V
VF(Typ@IF=5A)	0.64V
IR(@VR=60V)	50uA
ID	10A

Symbol

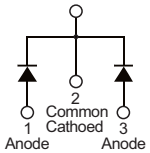

■ MECHANICAL CHARACTERISTICS

- Case: epoxy,molded
- Finish:all external surfaces corrosion resistant and terminal
- Leads are readily solderable
- Leads temperature for soldering purposes: 260°C Max for 10 seconds

■ FEATURES

- Guard ring for stress protection
- Low forward voltage
- Low power loss/high efficiency
- High surge capacity
- Low stored charge majority carrier conduction
- Pb free package are available

TO-252

TO-251

■ ORDER INFORMATION

Order codes		Package	Packing
Halogen-free	Halogen		
N/A	MOT1060C	TO-251	70pieces/Tube
N/A	MOT1060D	TO-252	2500pieces/Reel

■ MAXIMUM RATINGS (Each diode leg)

Parameter		Symbol	Value	Unit
Peak repetitive reverse voltage		V_{RRM}	60	V
Average rectified output current	Total	I_O	10	A
	Per leg		5	A
Non-repetitive peak forward surge current 8.3ms single half sine-wave superimposed on reate load		I_{FSM}	150	A
Operating and storage temperature range		T_J,T_{STG}	-55 to + 175	°C

■ ELECTRICAL CHARACTERISTICS

Parameter	Symbol	Conditions	Min	Typ	Max	Unit
Peak repetitive reverse voltage	B_V	I_C=0.5mA,T_J=25°C	60	-	-	V
Forward voltage drop	V_F	I_F=5A, T_J=25°C	-	0.64	0.67	V
Leakage current	I_R	V_R=60V, T_J=25°C	-	-	0.05	mA
		V_R=60V, T_J=125°C	-	-	6	

■ TYPICAL CHARACTERISTICS

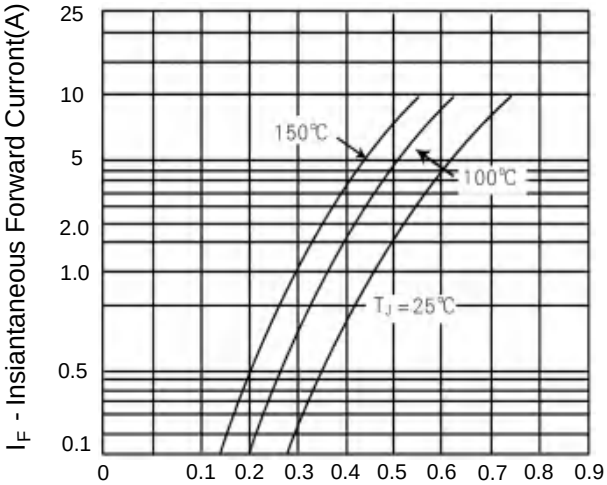

Figure 1. Typical Forward Voltage Per Diode

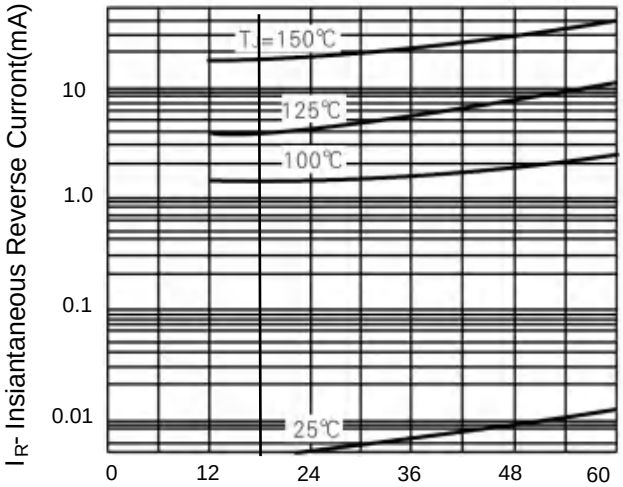

Figure 2. Typical Reverse Current Per Diode

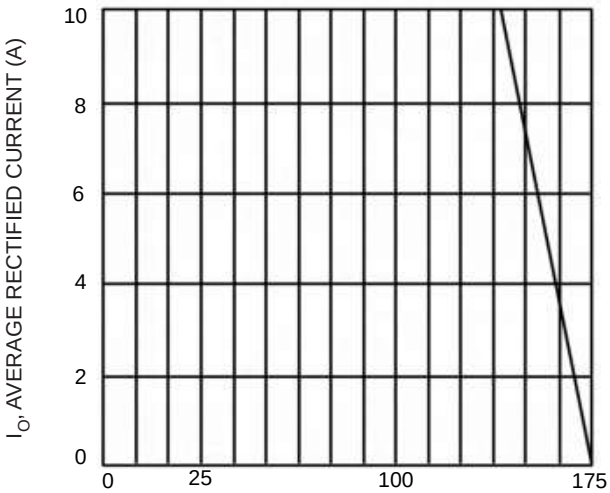

T_C,CASE TEMPERATURE(°C)

Fig.3 Forward Current Derating Curve

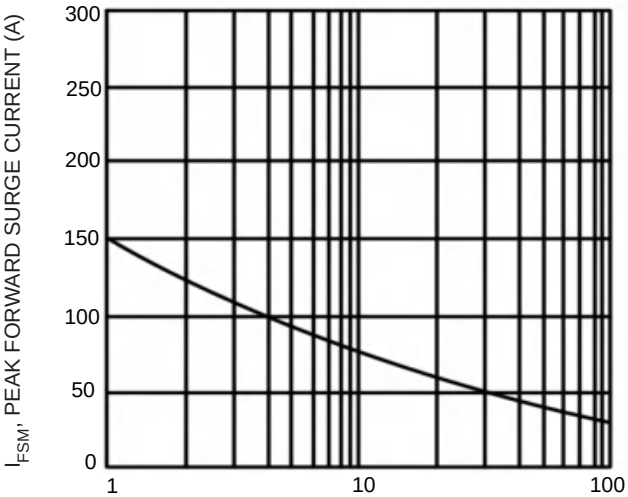

NUMBER OF CYCLES AT 60HZ

Fig.4 Max Non-Repetitive Surge Current

■ TO-251 PACKAGE OUTLINE DIMENSIONS

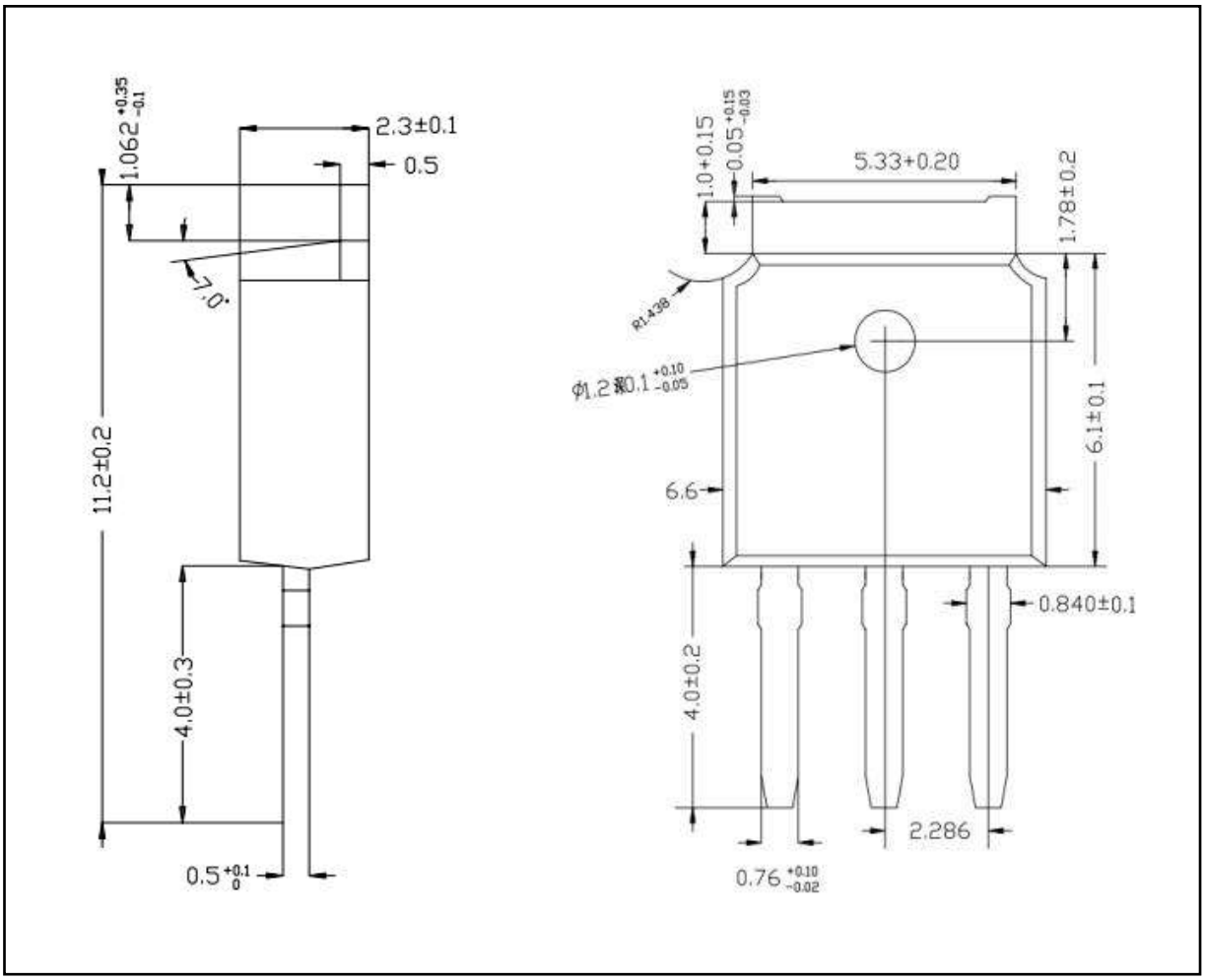
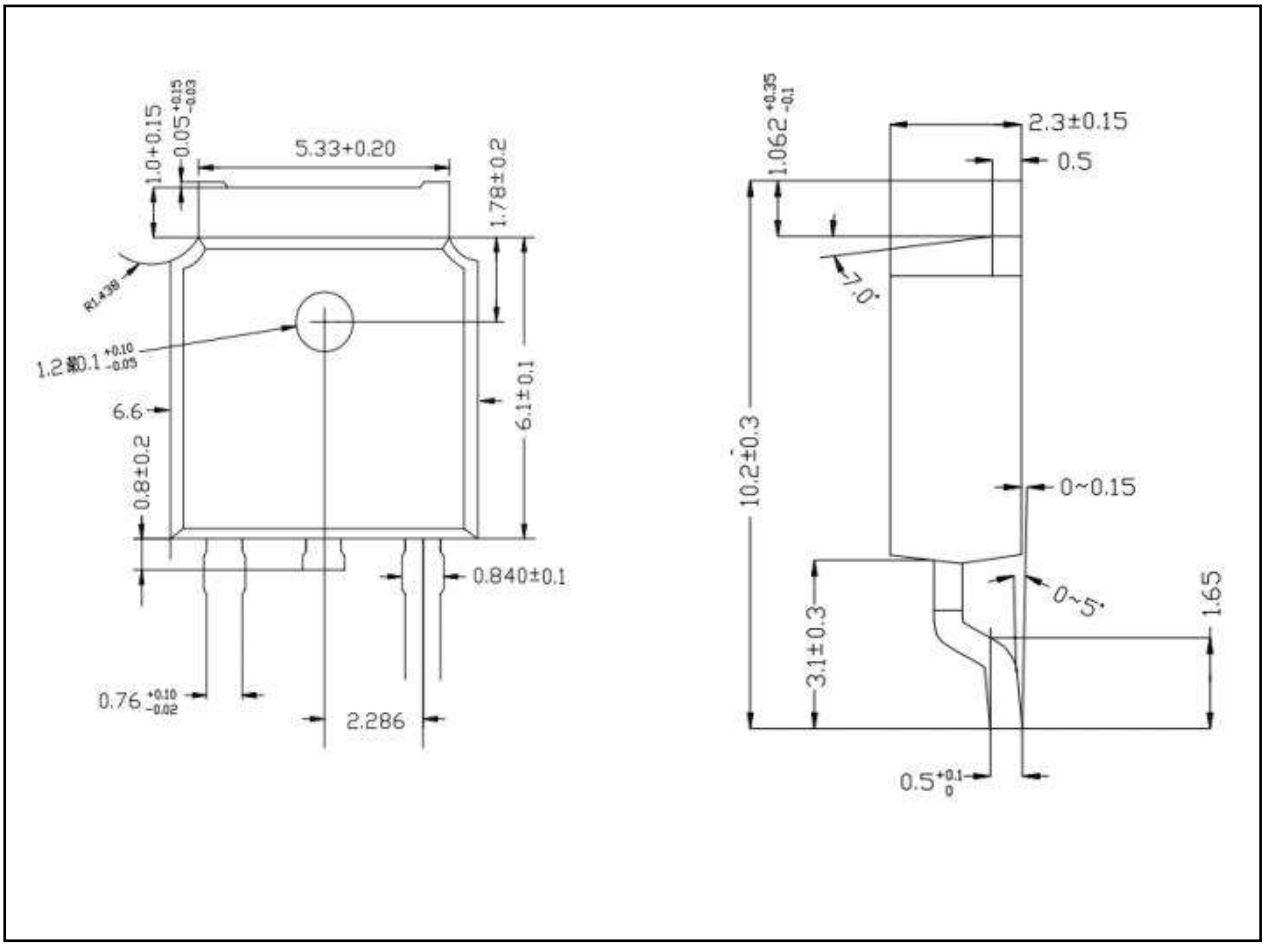
■ TO-252 PACKAGE OUTLINE DIMENSIONS