■ PRODUCT CHARACTERISTICS

VDSS	600V
R_{DS}(on)Typ(@V_{GS} =10 V)	0.68Ω
Qg@type	37.9 nC
ID	10A

Symbol

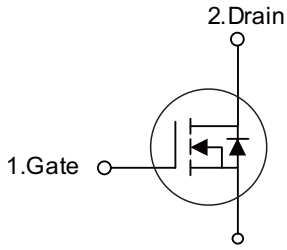

■ APPLICATIONS

* High efficiency switch mode power supplies
* Electronic lamp ballasts based on half bridge
* LED power supplies

■ FEATURES

* Fast switching capability
* Avalanche energy specified
* Improved dv/dt capability, high ruggedness



TO-220



TO-220F

■ ORDER INFORMATION

Order codes		Package	Packing
Halogen-Free	Halogen		
N/A	MOT10N60F	TO-220F	50 pieces/Tube
N/A	MOT10N60A	TO-220	50 pieces/Tube

■ ABSOLUTE MAXIMUM RATINGS (T_C = 25°C, unless otherwise specified)

PARAMETER		SYMBOL	RATINGS	UNIT
Drain-Source Voltage		V_{DSS}	600	V
Gate-Source Voltage		V_{GSS}	± 30	V
Avalanche Current (Note 2)		I_{AR}	10	A
Drain Current	Continuous	I_D	10	A
	Pulsed (Note 2)	I_{DM}	40	A
Avalanche Energy	Single Pulsed (Note 3)	E_{AS}	200	mJ
	Repetitive (Note 2)	E_{AR}	12	mJ
Peak Diode Recovery dv/dt (Note 4)		dv/dt	4.5	V/ns
Power Dissipation	TO-220	P_D	156	W
	TO-220F		52	W
Junction Temperature		T_J	+150	°C
Operating Temperature		T_{OPR}	-55 ~ +150	°C
Storage Temperature		T_{STG}	-55 ~ +150	°C

Notes: 1. Absolute maximum ratings are those values beyond which the device could be permanently damaged. Absolute maximum ratings are stress ratings only and functional device operation is not implied.
2. Repetitive Rating: Pulse width limited by maximum junction temperature
3. L = 4mH, I_{AS} = 10A, V_{DD} = 50V, R_G = 25 Ω Starting T_J = 25°C
4. I_{SD} ≤ 9.5A, di/dt ≤200A/μs, V_{DD} ≤BV_{DSS}, Starting T^J = 25°C

■ ELECTRICAL CHARACTERISTICS (T_C=25°C, unless otherwise noted)

PARAMETER		SYMBOL	TEST CONDITIONS	MIN	TYP	MAX	UNIT
Off characteristics							
Drain-Source Breakdown Voltage		BV_{DSS}	V_{GS}=0V, I_D= 250μA	600	-	-	V
Drain-Source Leakage Current		I_{DSS}	V_{DS}=600V, V_{GS}=0V	-	-	1	μA
Gate-Source Leakage Current	Forward	I_{GSS}	V_{GS}=30V, V_{DS}=0V	-	-	100	nA
	Reverse		V_{GS}=-30V, V_{DS}=0V	-	-	-100	nA
Breakdown Voltage Temperature Coefficient		$\Delta BV_{DSS}/\Delta T_J$	I_D=250 μA, Referenced to 25°C	-	0.7		V/°C
On characteristics							
Gate Threshold Voltage		$V_{GS(TH)}$	V_{DS}=V_{GS}, I_D=250μA	2.0	-	4.0	V
Static Drain-Source On-State Resistance		$R_{DS(ON)}$	V_{GS}=10V, I_D=5.0A	-	0.68	0.75	Ω
Dynamic characteristics							
Input Capacitance		C_{ISS}	V_{DS}=25V, V_{GS}=0V, f=1.0 MHz	-	1330	-	pF
Output Capacitance		C_{OSS}		-	150	-	pF
Reverse Transfer Capacitance		C_{RSS}		-	7	-	pF
Switching characteristics							
Total Gate Charge		Q_G	V_{DS}=480V, I_D=9.5A, V_{GS}=10V I_G=100μA (Note1, 2)	-	37.2	-	nC
Gate-Source Charge		Q_{GS}		-	6.9	-	nC
Gate-Drain Charge		Q_{GD}		-	21.1	-	nC
Turn-On Delay Time		$t_{D(ON)}$	V_{DD}=30V, I_D=0.5A, R_G=25Ω, V_{GS}=0V (Note1, 2)	-	56	-	ns
Turn-On Rise Time		t_R		-	68	-	ns
Turn-Off Delay Time		$t_{D(OFF)}$		-	300	-	ns
Turn-Off Fall Time		t_F		-	84	-	ns
Drain-source diode characteristics							
Maximum Continuous Drain-Source Diode Forward Current		I_S		-	-	10	A
Maximum Pulsed Drain-Source Diode Forward Current		I_{SM}		-	-	38	A
Drain-Source Diode Forward Voltage		V_{SD}	V_{GS}=0V, I_S=10A	-	-	1.4	V
Reverse Recovery Time		t_{rr}	V_{GS}=0V, I_S=10A, dI_F/dt=100A/μs (Note1)	-	420	-	ns
Reverse Recovery Charge		Q_{rr}		-	4.2	-	μC

Notes: 1. Pulse Test : Pulse width ≤300μs, Duty cycle ≤2%
2. Essentially independent of operating temperature

■ TEST CIRCUITS AND WAVEFORMS

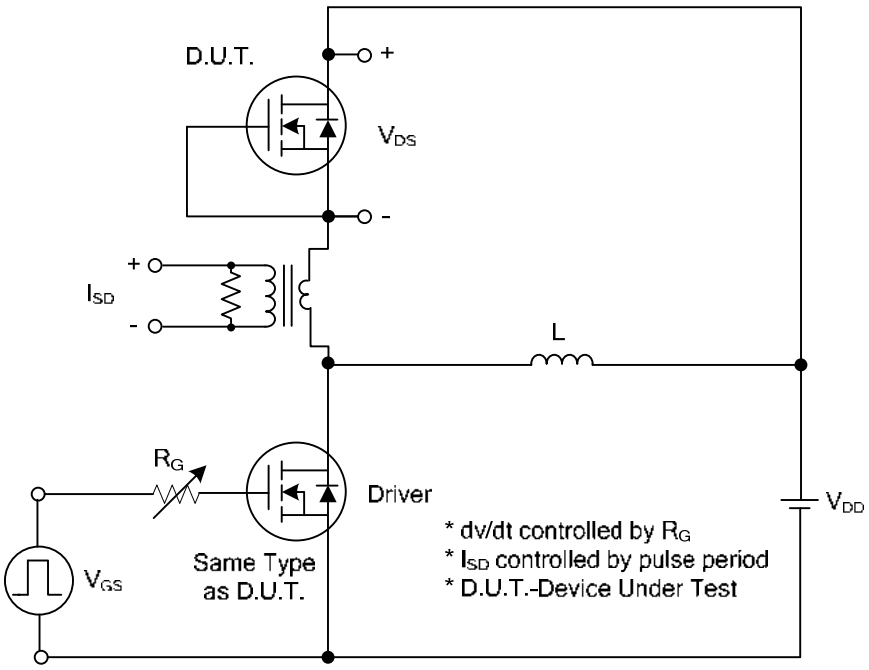

Peak Diode Recovery dv/dt Test Circuit

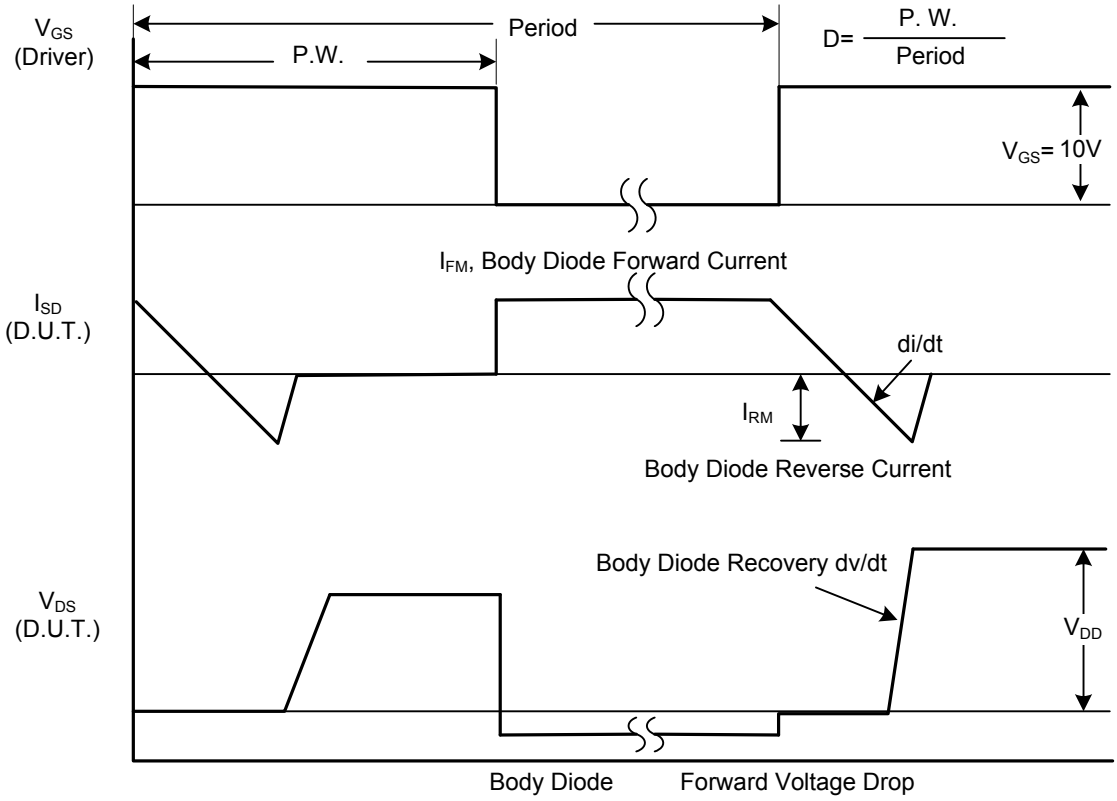

Peak Diode Recovery dv/dt Waveforms

■ TEST CIRCUITS AND WAVEFORMS(Cont.)

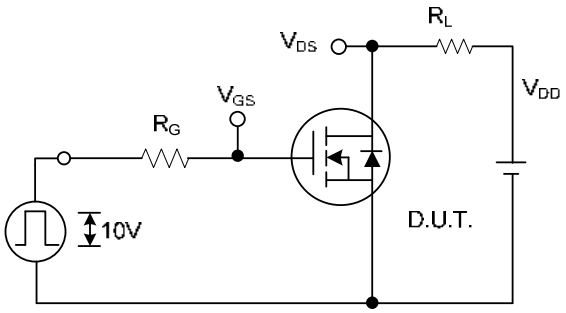

Switching Test Circuit

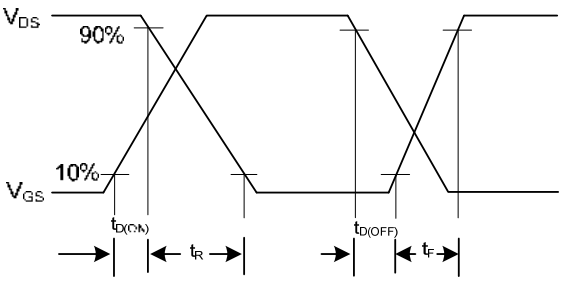

Switching Waveforms

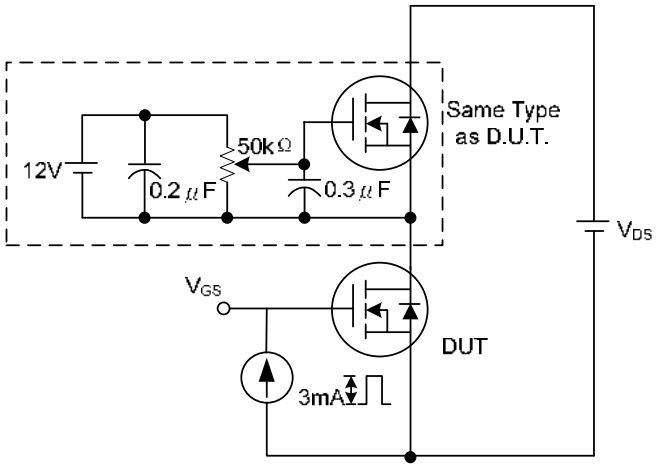

Gate Charge Test Circuit

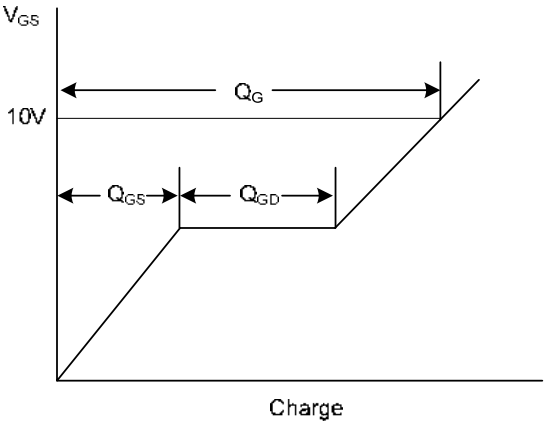

Gate Charge Waveform

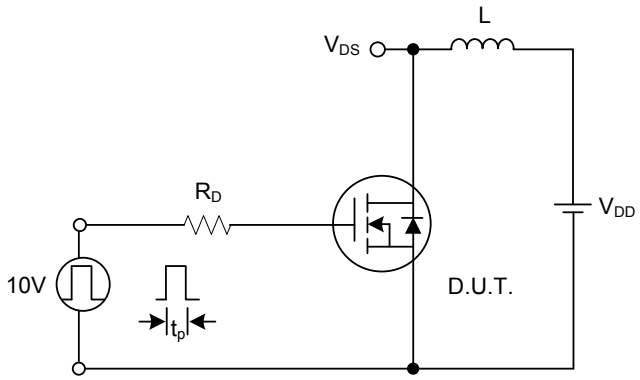

Unclamped Inductive Switching Test Circuit

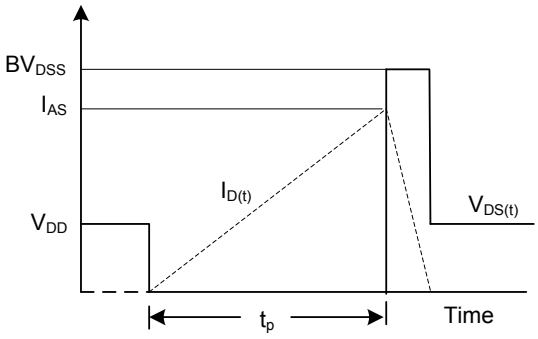

Unclamped Inductive Switching Waveforms

■ TYPICAL CHARACTERISTICS

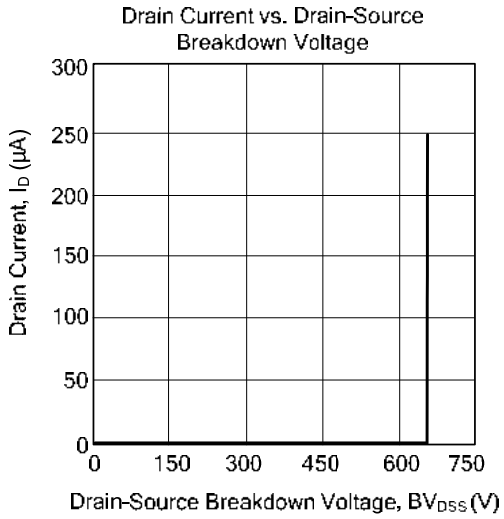

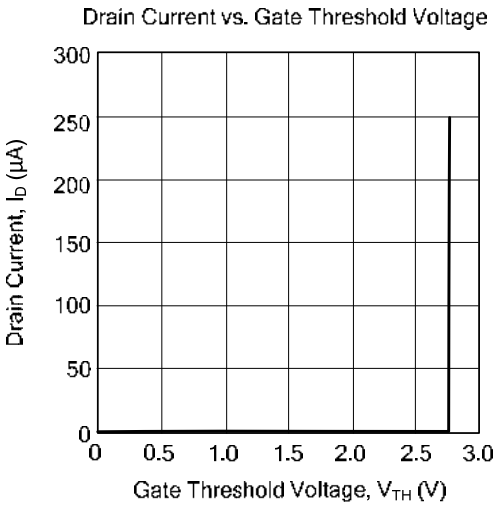

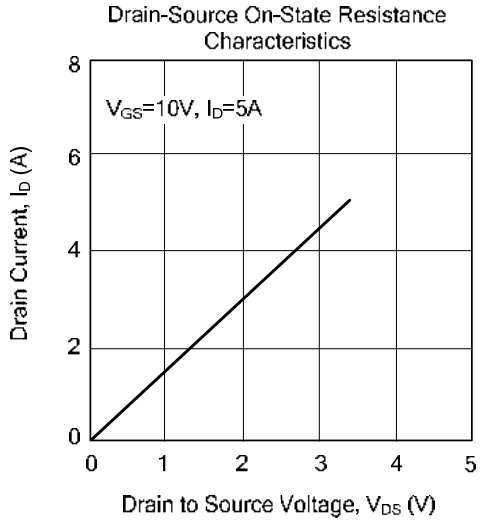

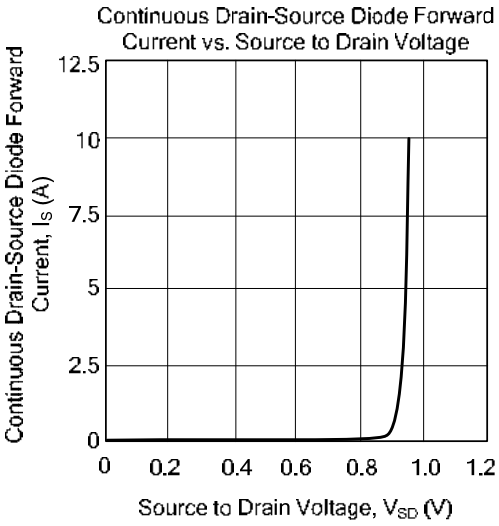

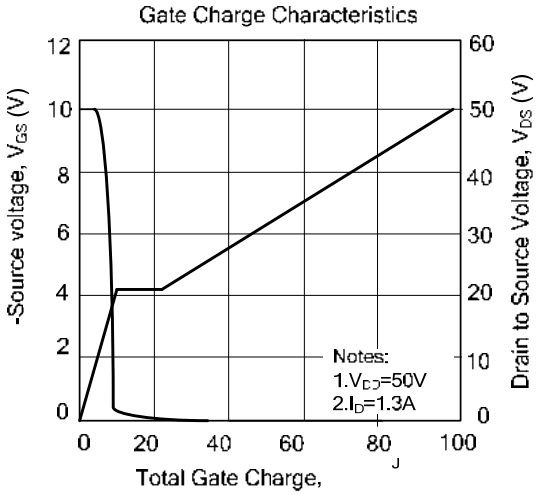

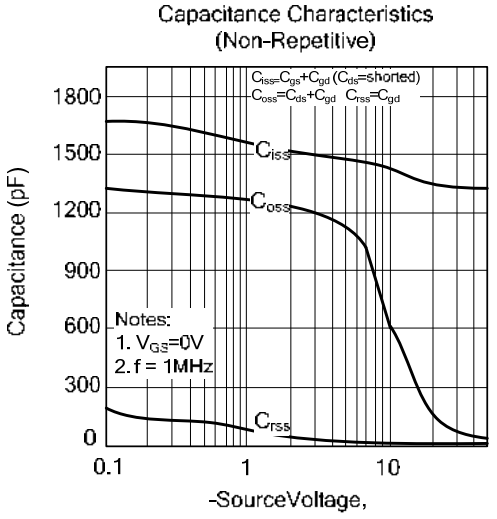

■ TYPICAL CHARACTERISTICS(Cont.)

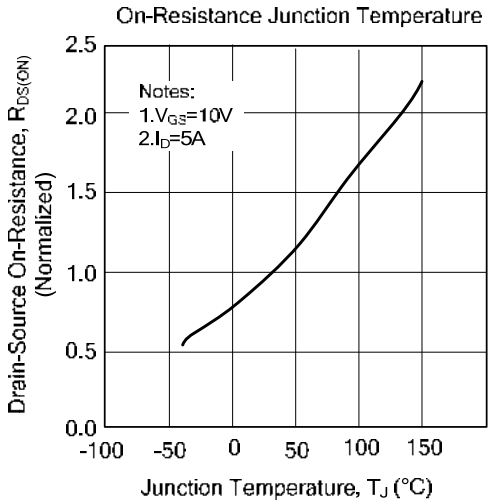

■ TO-220F PACKAGE OUTLINE DIMENSIONS

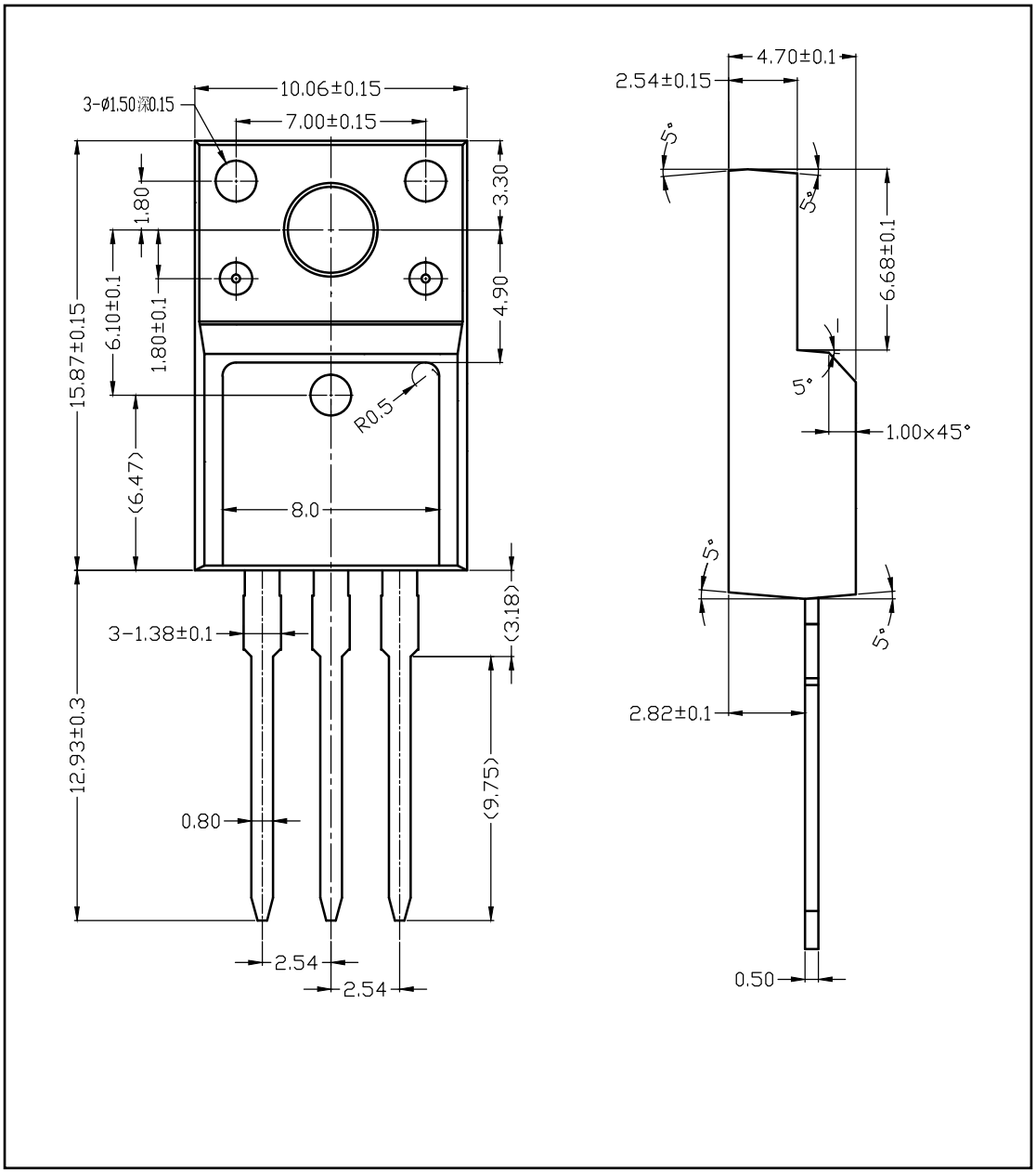

■ TO-220 PACKAGE OUTLINE DIMENSIONS

