■ PRODUCT CHARACTERISTICS

VDSS	650V
R_{DS}(on)typ(@V_{GS} =10 V)	0.9Ω
Qg@type	44nC
ID	10A

Symbol

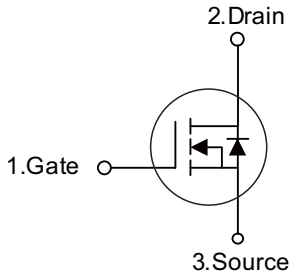

■ APPLICATIONS

- High frequency switching mode power supply
- Electronic ballast
- UPS

■ FEATURES

* Ultra low gate charge
* Fast switching capability
* Avalanche energy tested
* Improved dv/dt capability, high ruggedness



TO-252

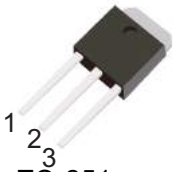

TO-251

■ ORDER INFORMATION

Order codes		Package	Packing
Halogen-Free	Halogen		
N/A	MOT10N65D	TO-252	2500 pieces /Reel
N/A	MOT10N65C	TO-251	70 pieces/Tube

■ ABSOLUTE MAXIMUM RATINGS (T_C = 25°C unless otherwise specified)

PARAMETER		SYMBOL	RATINGS	UNIT
Drain-Source Voltage		V_{DSS}	650	V
Gate-Source Voltage		V_{GSS}	±30	V
Avalanche Current (Note 2)		I_{AR}	10	A
Drain Current	Continuous	I_D	10	A
	Pulsed (Note 2)	I_{DM}	38	A
Avalanche Energy	Single Pulsed (Note 3)	E_{AS}	700	mJ
	Repetitive (Note 2)	E_{AR}	15.6	mJ
Peak Diode Recovery dv/dt (Note 4)		dv/dt	4.5	V/ns
Power Dissipation	TO-252/251	P_D	156	W
Junction Temperature		T_J	+150	°C
Operating Temperature		T_{OPR}	-55 ~ +150	°C
Storage Temperature		T_{STG}	-55 ~ +150	°C

Notes: 1. Absolute maximum ratings are those values beyond which the device could be permanently damaged. Absolute maximum ratings are stress ratings only and functional device operation is not implied.

2. Repetitive Rating: Pulse width limited by maximum junction temperature
3. L = 14.2mH, I_{AS} = 10A, V_{DD} = 50V, R_G = 25 Ω Starting T_J = 25°C
4. I_{SD} ≤ 9.5A, di/dt ≤200A/μs, V_{DD} ≤BV_{DSS}, Starting T_J = 25°C

■ ELECTRICAL CHARACTERISTICS (T_C = 25°C, unless otherwise specified)

PARAMETER		SYMBOL	TEST CONDITIONS	MIN	TYP	MAX	UNIT
Off characteristics							
Drain-Source Breakdown Voltage		BV_{DSS}	V_{GS} = 0V, I_D = 250μA	650	-	-	V
Drain-Source Leakage Current		I_{DSS}	V_{DS} = 650V, V_{GS} = 0V	-	-	1	μA
Gate-Source Leakage Current	Forward	I_{GSS}	V_{GS} = 30 V, V_{DS} = 0 V	-	-	100	nA
	Reverse		V_{GS} = -30 V, V_{DS} = 0 V	-	-	-100	nA
Breakdown Voltage Temperature Coefficient		$\Delta BV_{DSS}/\Delta T_J$	I_D = 250 μA, Referenced to 25°C	-	0.7	-	V/°C
Gate Threshold Voltage		$V_{GS(TH)}$	V_{DS} = V_{GS}, I_D = 250μA	2.0	-	4.0	V
Static Drain-Source On-State Resistance		$R_{DS(ON)}$	V_{GS} = 10V, I_D = 5.0A	-	0.9	0.96	Ω
Dynamic characteristics							
Input Capacitance		C_{ISS}	V_{DS}=25V, V_{GS}=0V, f=1.0 MHz	-	1570	-	pF
Output Capacitance		C_{OSS}		-	166	-	pF
Reverse Transfer Capacitance		C_{RSS}		-	18	-	pF
Switching characteristics							
Turn-On Delay Time		$t_{D(ON)}$	V_{DD}=325V, I_D =10A, R_G =25Ω (Note 1, 2)	-	23	-	ns
Turn-On Rise Time		t_R		-	69	-	ns
Turn-Off Delay Time		$t_{D(OFF)}$		-	144	-	ns
Turn-Off Fall Time		t_F		-	77	-	ns
Total Gate Charge		Q_G	V_{DS}=520V, I_D=10A, V_{GS}=10 V (Note 1, 2)	-	44	-	nC
Gate-Source Charge		Q_{GS}		-	6.7	-	nC
Gate-Drain Charge		Q_{GD}		-	18.5	-	nC
Drain-source diode characteristics maximum ratings							
Drain-Source Diode Forward Voltage		V_{SD}	V_{GS} = 0 V, I_S =10A	-	-	1.4	V
Maximum Continuous Drain-Source Diode Forward Current		I_S		-	-	10	A
Maximum Pulsed Drain-Source Diode Forward Current		I_{SM}		-	-	38	A
Reverse Recovery Time		t_{rr}	V_{GS} = 0 V, I_S = 10A, dI_F / dt = 100 A/μs (Note 1)	-	420	-	ns
Reverse Recovery Charge		Q_{RR}		-	4.2	-	μC

Notes: 1. Pulse Test : Pulse width ≤300μs, Duty cycle ≤2%
2. Essentially independent of operating temperature

■ TYTEST CIRCUITS AND WAVEFORMS

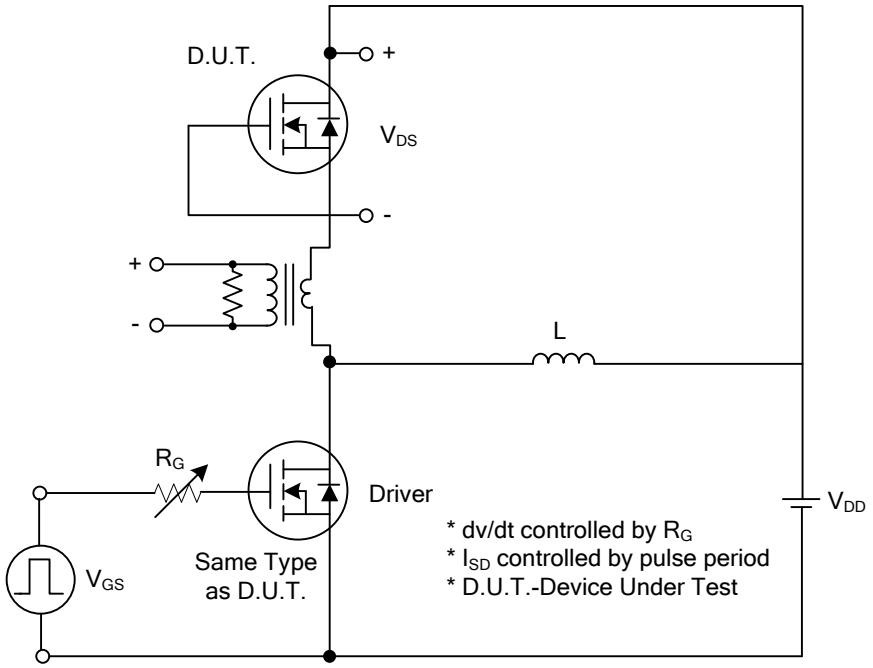

Peak Diode Recovery dv/dt Test Circuit

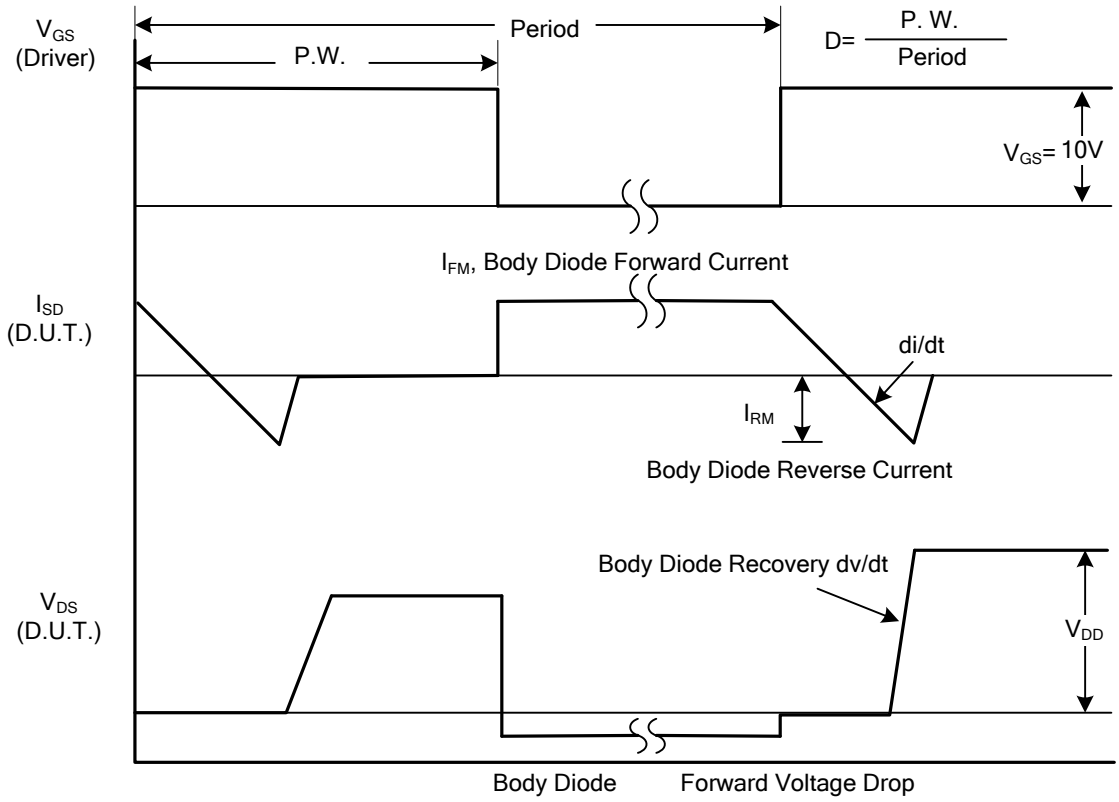

Peak Diode Recovery dv/dt Waveforms

■ TYTEST CIRCUITS AND WAVEFORMS(Cont.)

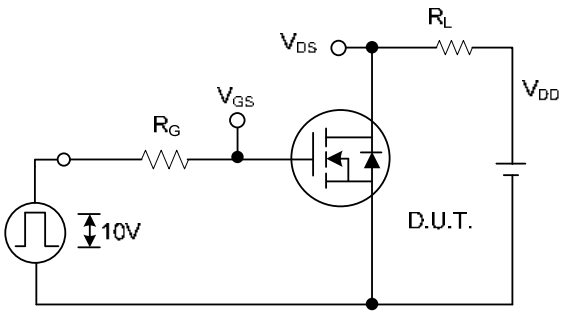

Switching Test Circuit

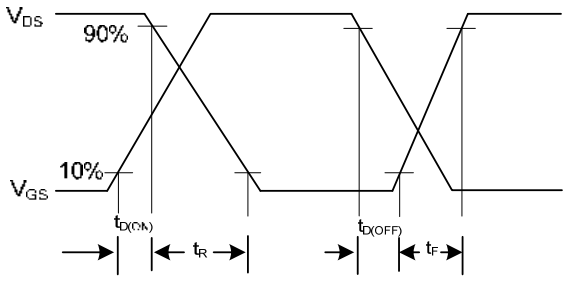

Switching Waveforms

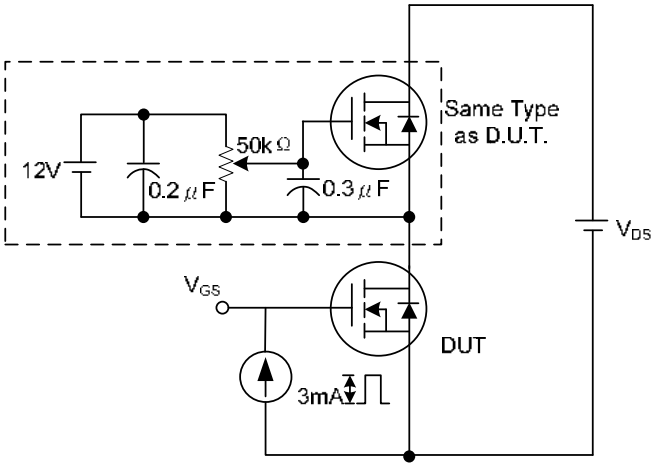

Gate Charge Test Circuit

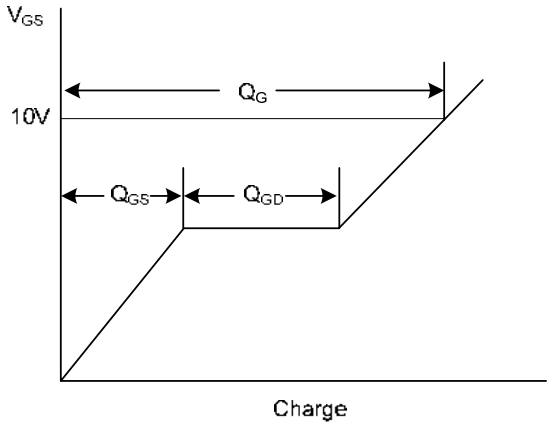

Gate Charge Waveform

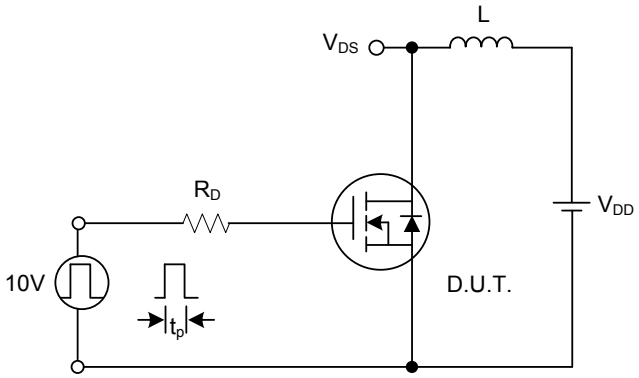

Unclamped Inductive Switching Test Circuit

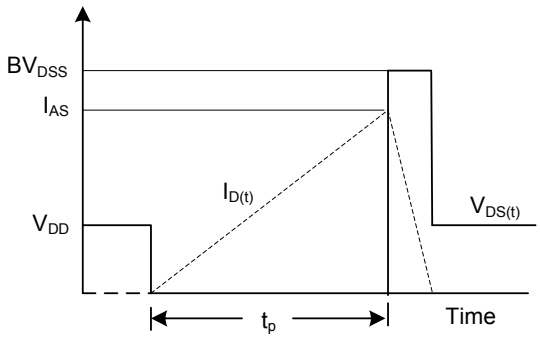

Unclamped Inductive Switching Waveforms

■ TYPICAL CHARACTERISTICS

On-Region Characteristics

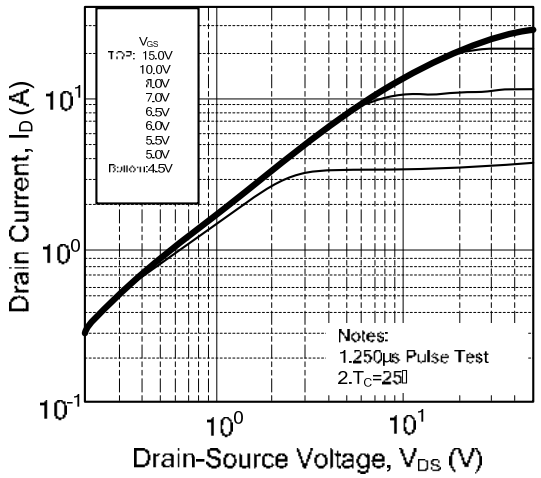

Transfer Characteristics

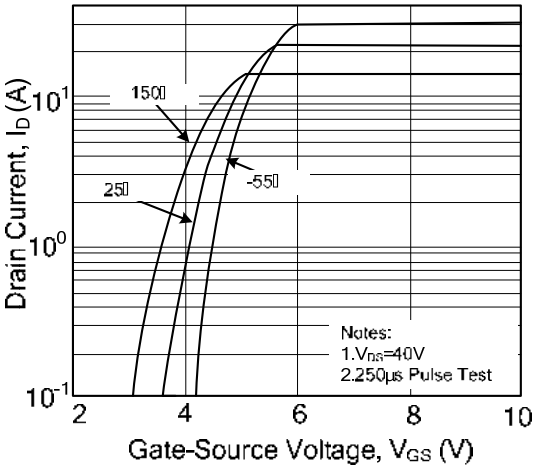

On-Resistance Variation vs. Drain Current and Gate Voltage

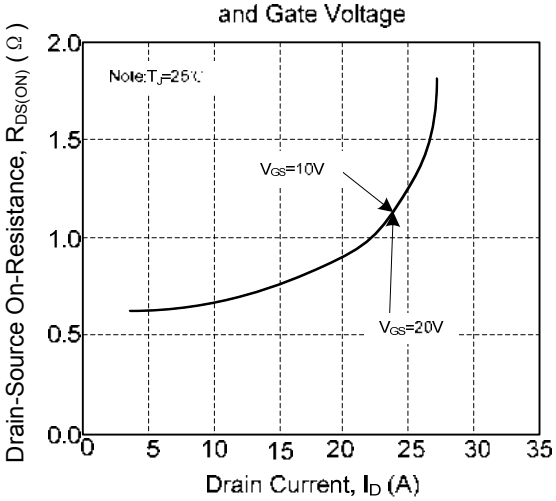

Body Diode Forward Voltage Variation with Source Current and Temperature

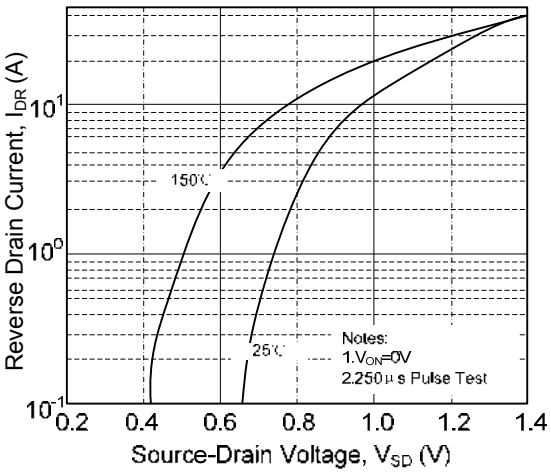

Capacitance Characteristics

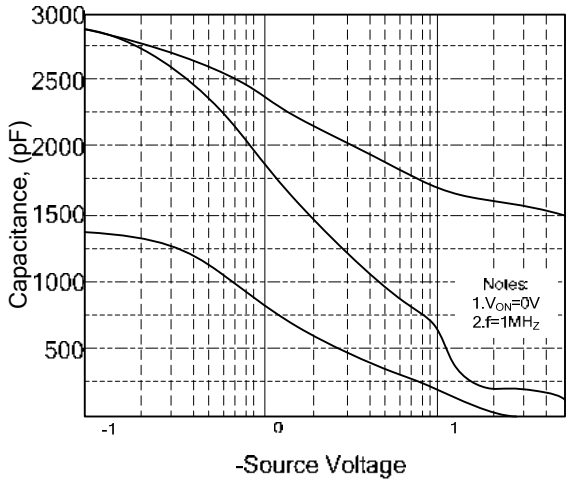

Gate Charge Characteristics

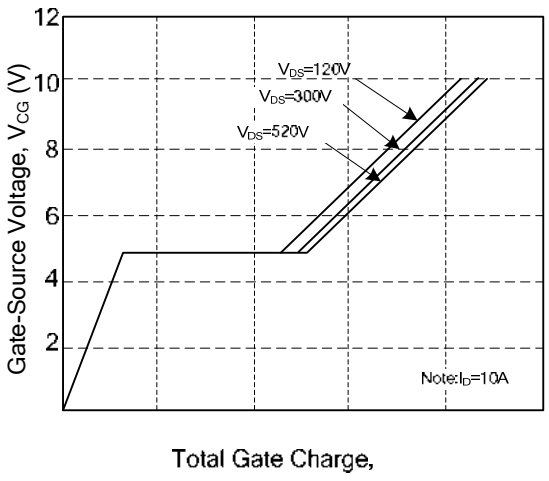

■ TYPICAL CHARACTERISTICS(Cont.)

Breakdown Voltage Variation vs. Temperature

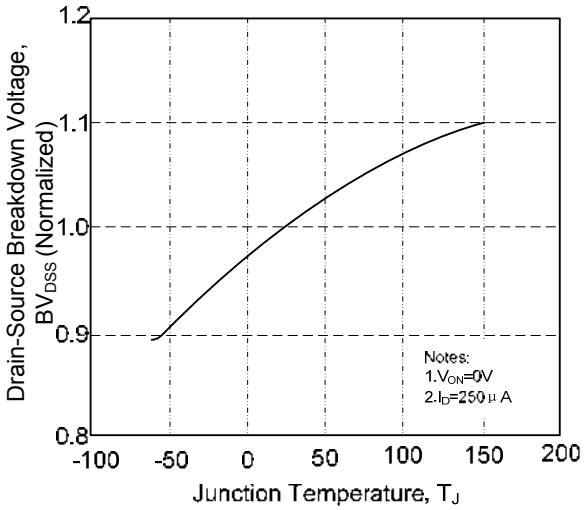

On-Resistance Variation vs. Temperature

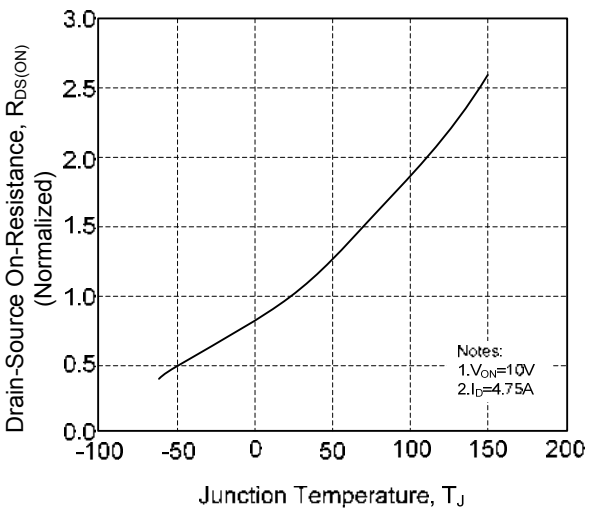

Maximum Safe Operating Area

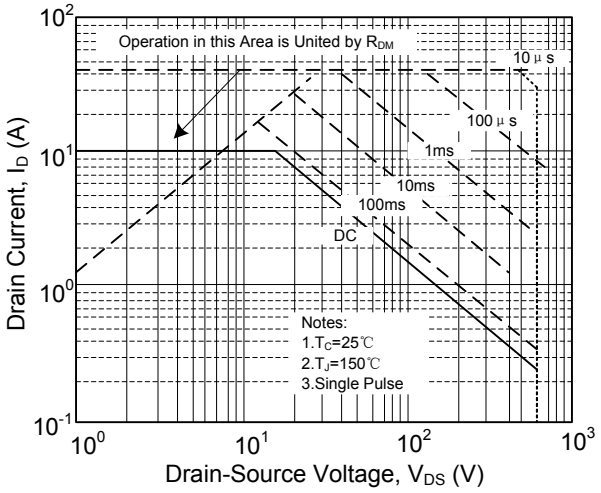

Maximum Drain Current vs. Case Temperature

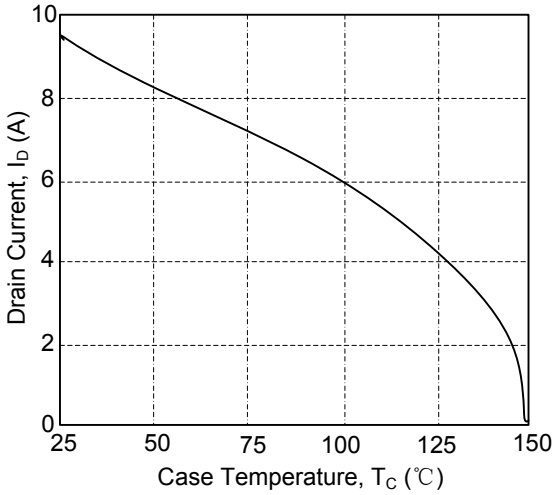

Transient Thermal Response Curve

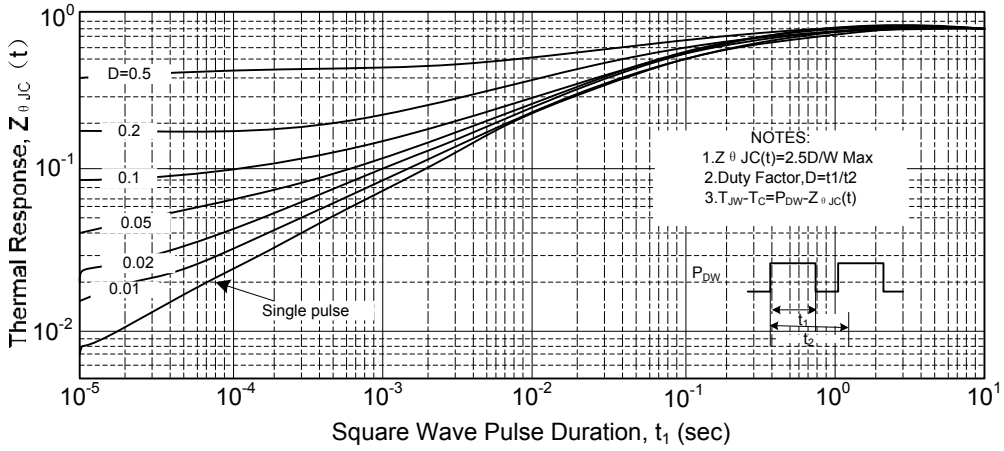

■ TO-251 PACKAGE OUTLINE DIMENSIONS

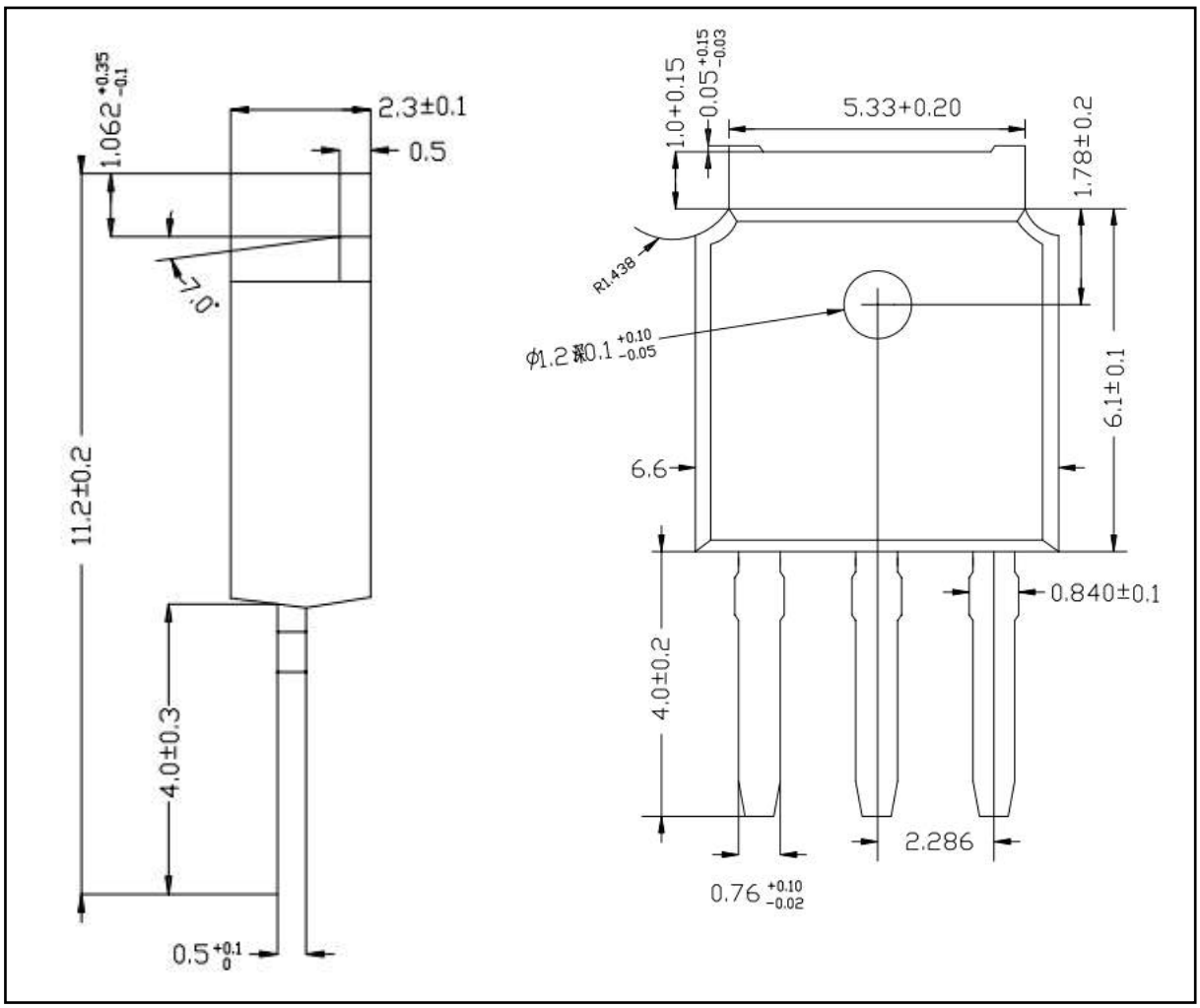

■ TO-252 PACKAGE OUTLINE DIMENSIONS

