■ PRODUCT CHARACTERISTICS

VDSS	500
R_{DS}(on)Typ(@V_{GS} =10 V)	0.48Ω
Qg@type	43nC
ID	11A

Symbol

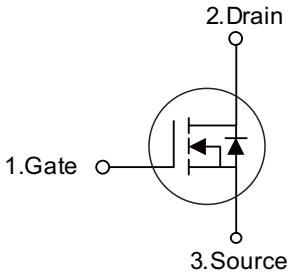

■ APPLICATIONS

- High efficiency switch mode power supplies
- Electronic ballasts
- LED power supply

■ FEATURES

* High Switching Speed
* 100% Avalanche Tested



TO-220

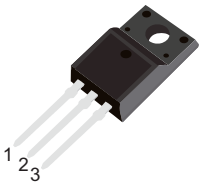

TO-220F

■ ORDER INFORMATION

Order codes		Package	Packing
Halogen-Free	Halogen		
N/A	MOT11N50F	TO-220F	50 pieces/Tube
N/A	MOT11N50A	TO-220	50 pieces/Tube

■ ABSOLUTE MAXIMUM RATINGS (T_C = 25°C, unless otherwise specified)

PARAMETER		SYMBOL	RATINGS	UNIT
Drain-Source Voltage		V_{DSS}	500	V
Gate-Source Voltage		V_{GSS}	±30	V
Continuous Drain Current		I_D	11	A
Pulsed Drain Current (Note 2)		I_{DM}	44	A
Avalanche Current (Note 2)		I_{AR}	11	A
Single Pulsed Avalanche Energy (Note 3)		E_{AS}	860	mJ
Repetitive Avalanche Energy (Note 2)		E_{AR}	19.5	mJ
Peak Diode Recovery dv/dt (Note 4)		dv/dt	4.5	V/ns
Power Dissipation (T_C=25°C)	TO-220	P_D	195	W
	TO-220F		48	W
Junction Temperature		T_J	+150	°C
Storage Temperature		T_{STG}	-55~+150	°C

Notes: 1. Absolute maximum ratings are those values beyond which the device could be permanently damaged. Absolute maximum ratings are stress ratings only and functional device operation is not implied.
2. Repetitive Rating : Pulse width limited by maximum junction temperature
3. L = 6.0, I_{AS} = 13A, V_{DD} = 50V, R_G= 25Ω ,Starting T_J = 25°C
4. I_{SD}≤13.A, di/dt ≤200A/μs, V_{DD}≤ BV_{DSS}, Starting T_J= 25°C

■ ELECTRICAL CHARACTERISTICS (T =25°C, unless otherwise noted)

PARAMETER	SYMBOL	TEST CONDITIONS	MIN	TYP	MAX	UNIT
Off characteristics						
Drain-Source Breakdown Voltage	BV_{DSS}	V_{GS} = 0V, I_D = 250μA	500	-	-	V
Drain-Source Leakage Current	I_{DSS}	V_{DS} = 500V, V_{GS} = 0V	-	-	1	μA
Gate-Source Leakage Current	I_{GSS}	V_{GS} = 30V, V_{DS} = 0V	-	-	100	nA
		V_{GS} = -30V, V_{DS} = 0V	-	-	-100	nA
Breakdown Voltage Temperature Coefficient	$\triangle BV_{DSS}/\triangle T_J$	I_D = 250μA Referenced to 25°C	-	0.5	-	V/°C
On characteristics						
Gate Threshold Voltage	$V_{GS(TH)}$	V_{DS} = V_{GS}, I_D = 250μA	2	-	4	V
Static Drain-Source On-State Resistance	$R_{DS(ON)}$	V_{GS} = 10V, I_D = 5.5A	-	0.48	0.52	Ω
Dynamic characteristics						
Input Capacitance	C_{ISS}	V_{DS}=25V, V_{GS}=0V, f=1.0MHz	-	1580	-	pF
Output Capacitance	C_{OSS}		-	180	-	pF
Reverse Transfer Capacitance	C_{RSS}		-	20	-	pF
Switching characteristics						
Turn-On Delay Time	$t_{D(ON)}$	V_{DD} =250V, I_D =11A R_G =25Ω (Note 1,2)	-	25	-	nS
Turn-On Rise Time	t_R		-	100	-	nS
Turn-Off Delay Time	$t_{D(OFF)}$		-	130	-	nS
Turn-Off Fall Time	t_F		-	100	-	nS
Total Gate Charge	Q_G	V_{DS}=400V, I_D=11A, V_{GS}=10 V (Note 1, 2)	-	43	-	nC
Gate-Source Charge	Q_{GS}		-	7.5	-	nC
Gate-Drain Charge	Q_{GD}		-	18.5	-	nC
Drain-source diode characteristics						
Drain-Source Diode Forward Voltage	V_{SD}	V_{GS} = 0V, I_S = 11 A	-	-	1.4	V
Maximum Continuous Forward Current	I_S		-	-	11	A
Maximum Pulsed Forward Current	I_{SM}		-	-	44	A
Reverse Recovery Time	t_{RR}	V_{GS} = 0V, I_S = 11A, dI_F / dt = 100A/μs (Note 1)	-	410	-	nS
Reverse Recovery Charge	Q_{RR}		-	4.5	-	nC

Notes: 1. Pulse Test : Pulse width≤300μs, Duty cycle≤2%

2. Essentially independent of operating ambient temperature

■ TEST CIRCUITS AND WAVEFORMS

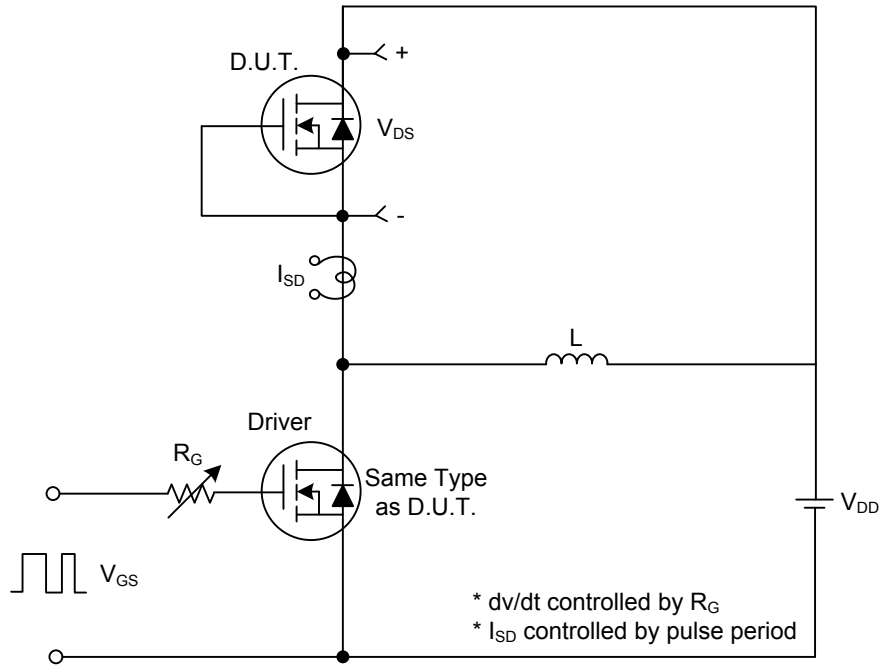

Fig. 1A Peak Diode Recovery dv/dt Test Circuit

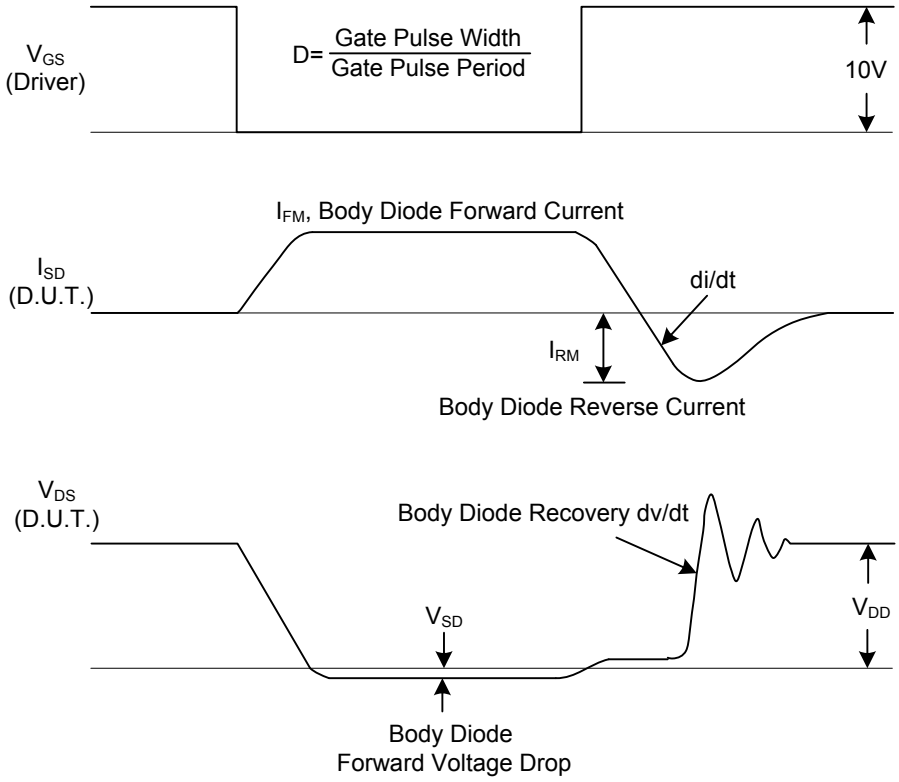

Fig. 1B Peak Diode Recovery dv/dt Waveforms

■ TEST CIRCUITS AND WAVEFORMS(Cont.)

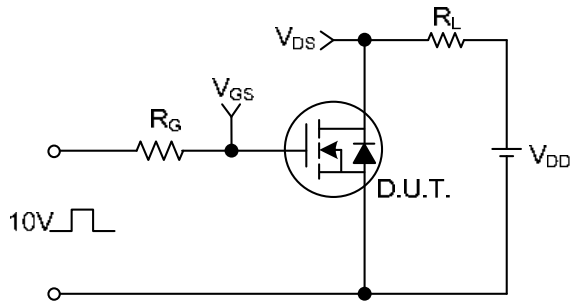

Fig. 2A Switching Test Circuit

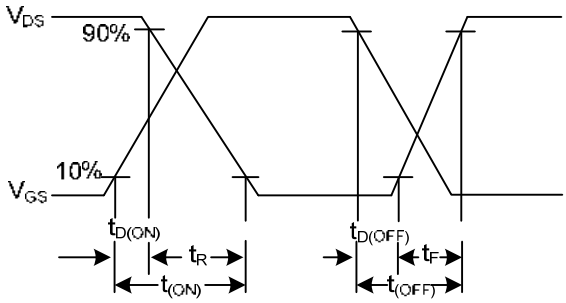

Fig.2B Switching Waveforms

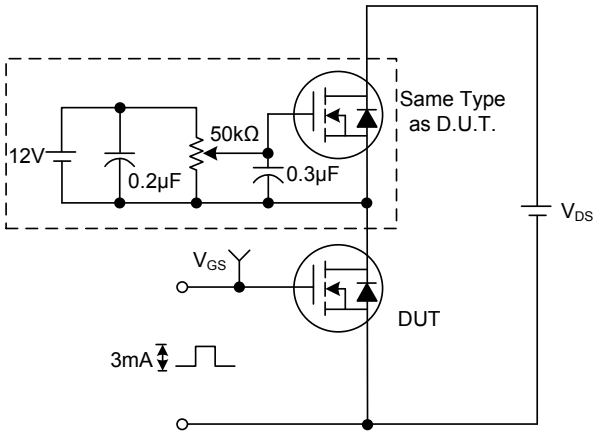

Fig. 3A Gate Charge Test Circuit

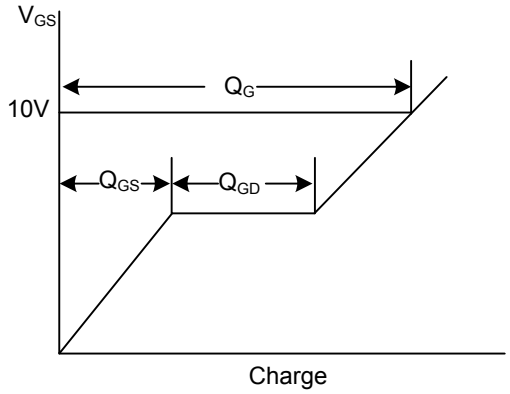

Fig. 3B Gate Charge Waveform

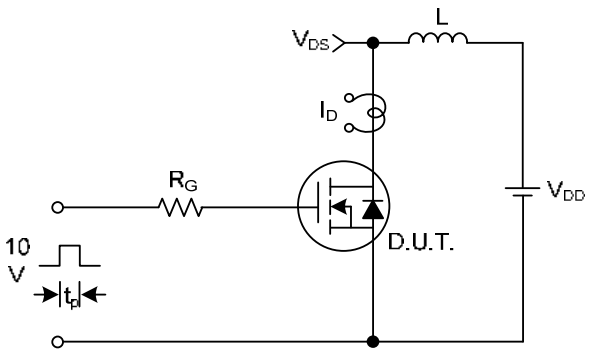

Fig. 4A Unclamped Inductive Switching Test Circuit

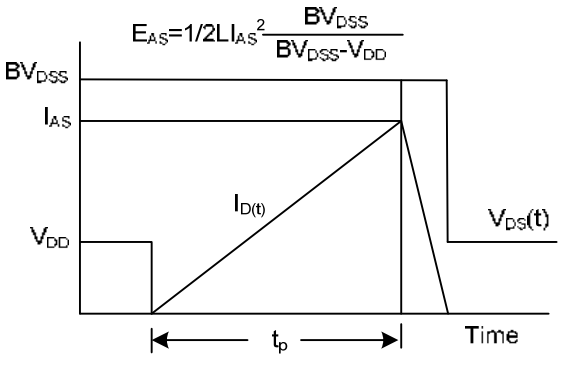

Fig. 4B Unclamped Inductive Switching Waveforms

■ TO-220F PACKAGE OUTLINE DIMENSIONS

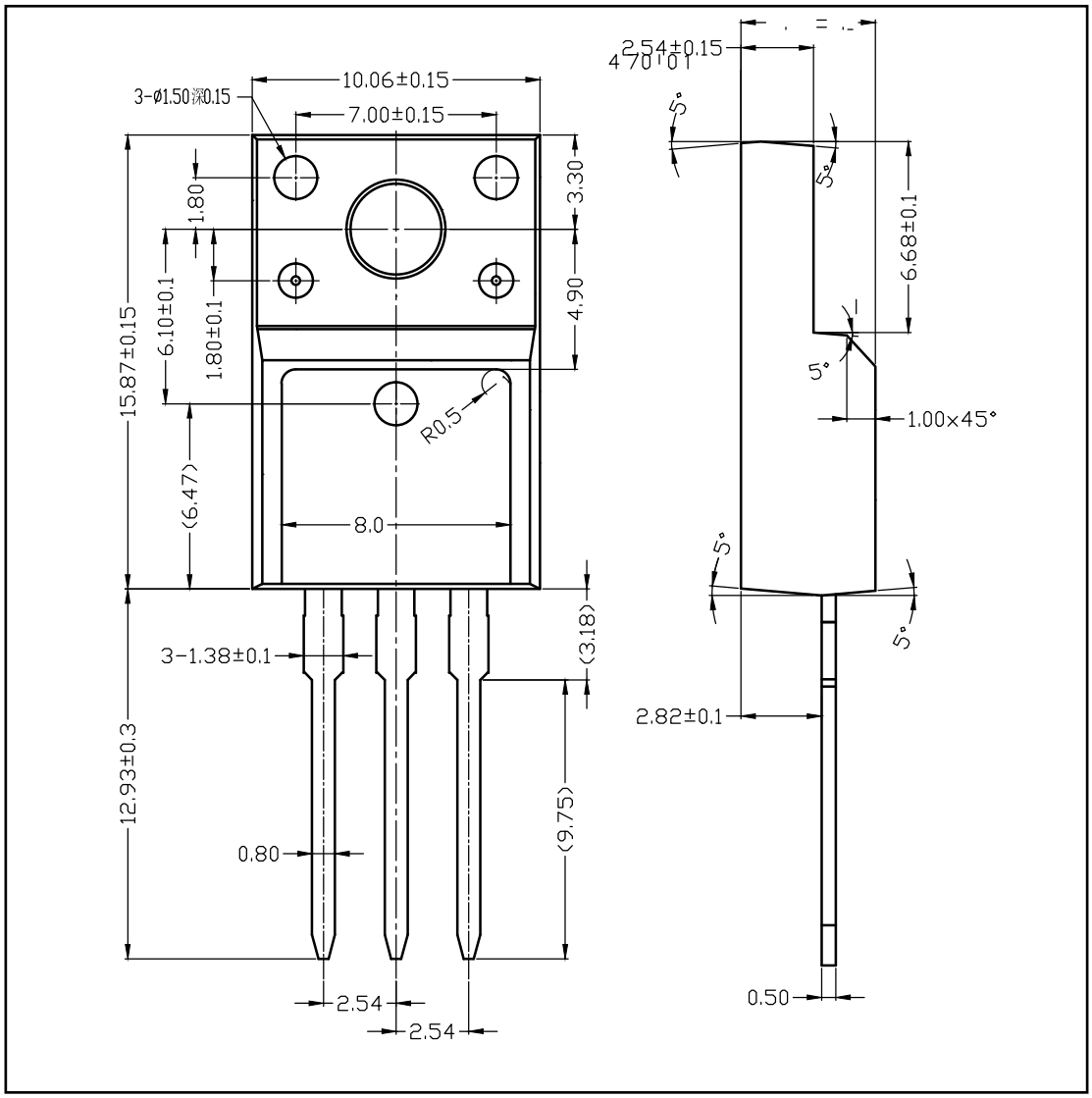

■ TO-220 PACKAGE OUTLINE DIMENSIONS

