■ PRODUCT CHARACTERISTICS

VDSS	600V
R_{DS}(on)Typ(@V_{GS}=10 V)	2.2Ω
Qg@type	20nC
ID	4A

Symbol

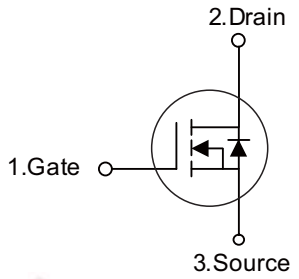

■ APPLICATIONS

- High frequency switching mode power supply
- Electronic ballast
- LED power supply

■ FEATURES

* Ultra Low Gate Charge
* Fast Switching Capability
* Avalanche Energy Specified
* Improved dv/dt Capability, high Ruggedness

TO-220

TO-220F

■ ORDER INFORMATION

Order codes		Package	Packing
Halogen-Free	Halogen		
N/A	MOT4N60F	TO-220F	50 pieces/Tube
N/A	MOT4N60A	TO-220	50 pieces/Tube

■ ABSOLUTE MAXIMUM RATINGS (T_C = 25°C, unless otherwise specified)

PARAMETER		SYMBOL	RATINGS	UNIT
Drain-Source Voltage		V_{DSS}	600	V
Gate-Source Voltage		V_{GSS}	±30	V
Avalanche Current (Note 2)		I_{AR}	4.0	A
Drain Current	Continuous	I_D	4.0	A
	Pulsed (Note 2)	I_{DM}	16	A
Avalanche Energy	Single Pulsed (Note 3)	E_{AS}	260	mJ
	Repetitive (Note 2)	E_{AR}	10.6	mJ
Peak Diode Recovery dv/dt (Note 4)		dv/dt	4.5	V/ns
Power Dissipation	TO-220	P_D	106	W
	TO-220F		36	W
Junction Temperature		T_J	+150	°C
Operating Temperature		T_{OPR}	-55 ~ +150	°C
Storage Temperature		T_{STG}	-55 ~ +150	°C

Notes: 1. Absolute maximum ratings are those values beyond which the device could be permanently damaged. Absolute maximum ratings are stress ratings only and functional device operation is not implied.
2. Repetitive Rating : Pulse width limited by maximum junction temperature
3. L = 30mH, I_{AS} = 4A, V_{DD} = 50V, R_G = 25 Ω, Starting T_J = 25°C
4. I_{SD}≤4.4A, di/dt ≤200A/μs, V_{DD}≤BV_{DSS}, Starting T_J = 25°C

■ ELECTRICAL CHARACTERISTICS (T_C=25°C, unless otherwise noted)

PARAMETER		SYMBOL	TEST CONDITIONS	MIN	TYP	MAX	UNIT
Off characteristics							
Drain-Source Breakdown Voltage		BV_{DSS}	V_{GS} = 0 V, I_D = 250 μA	600	-	-	V
Drain-Source Leakage Current		I_{DSS}	V_{DS} = 600 V, V_{GS} = 0 V	-	-	10	μA
Gate-Source Leakage Current	Forward	I_{GSS}	V_{GS} = 30 V, V_{DS} = 0 V	-	-	100	nA
	Reverse		V_{GS} = -30 V, V_{DS} = 0 V	-	-	-100	nA
Breakdown Voltage Temperature Coefficient		$\triangle BV_{DSS}/\triangle T_J$	I_D = 250 μA, Referenced to 25°C	-	0.6	-	V/°C
On characteristics							
Gate Threshold Voltage		$V_{GS(TH)}$	V_{DS} = V_{GS}, I_D = 250 μA	2.0	-	4.0	V
Static Drain-Source On-State Resistance		$R_{DS(ON)}$	V_{GS} = 10 V, I_D = 2.0A	-	2.2	2.5	Ω
Dynamic characteristics							
Input Capacitance		C_{ISS}	V_{DS} = 25 V, V_{GS} = 0 V, f = 1MHz	-	520	-	pF
Output Capacitance		C_{OSS}		-	70	-	pF
Reverse Transfer Capacitance		C_{RSS}		-	8	-	pF
Switching characteristics							
Turn-On Delay Time		$t_{D(ON)}$	V_{DD} = 300V, I_D = 4.0A, R_G = 25Ω (Note 1, 2)	-	15	-	ns
Turn-On Rise Time		t_R		-	45	-	ns
Turn-Off Delay Time		$_{D(OFF)}$		-	25	-	ns
Turn-Off Fall Time		t_F		-	35	-	ns
Total Gate Charge		Q_G	V_{DS}= 480V,I_D= 4.0A, V_{GS}= 10 V (Note 1, 2)	-	15	-	nC
Gate-Source Charge		Q_{GS}		-	3.4	-	nC
Gate-Drain Charge		Q_{GD}		-	7.1	-	nC
Source-drain diode ratings and characteristics							
Drain-Source Diode Forward Voltage		V_{SD}	V_{GS} = 0 V, I_S = 4.0 A	-	-	1.4	V
Continuous Drain-Source Diode		I_S		-	-	4	A
Maximum Pulsed Drain-Source Diode		I_{SM}		-	-	16	A
Reverse Recovery Time		T_{RR}	V_{GS} = 0 V, I_S = 4.0 A dI_F/dt = 100 A/μs (Note 1)	-	250	-	ns
Reverse Recovery Charge		Q_{RR}		-	1.5	-	μC

Notes: 1. Pulse Test: Pulse width≤300μs, Duty cycle≤2%
2. Essentially independent of operating temperature

■ TEST CIRCUITS AND WAVEFORMS

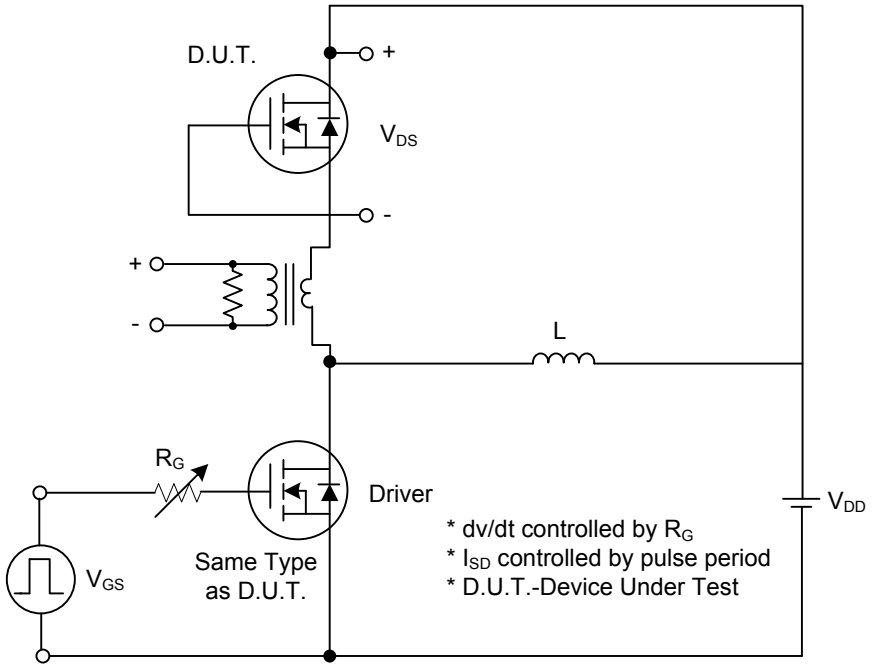

Fig. 1A Peak Diode Recovery dv/dt Test Circuit

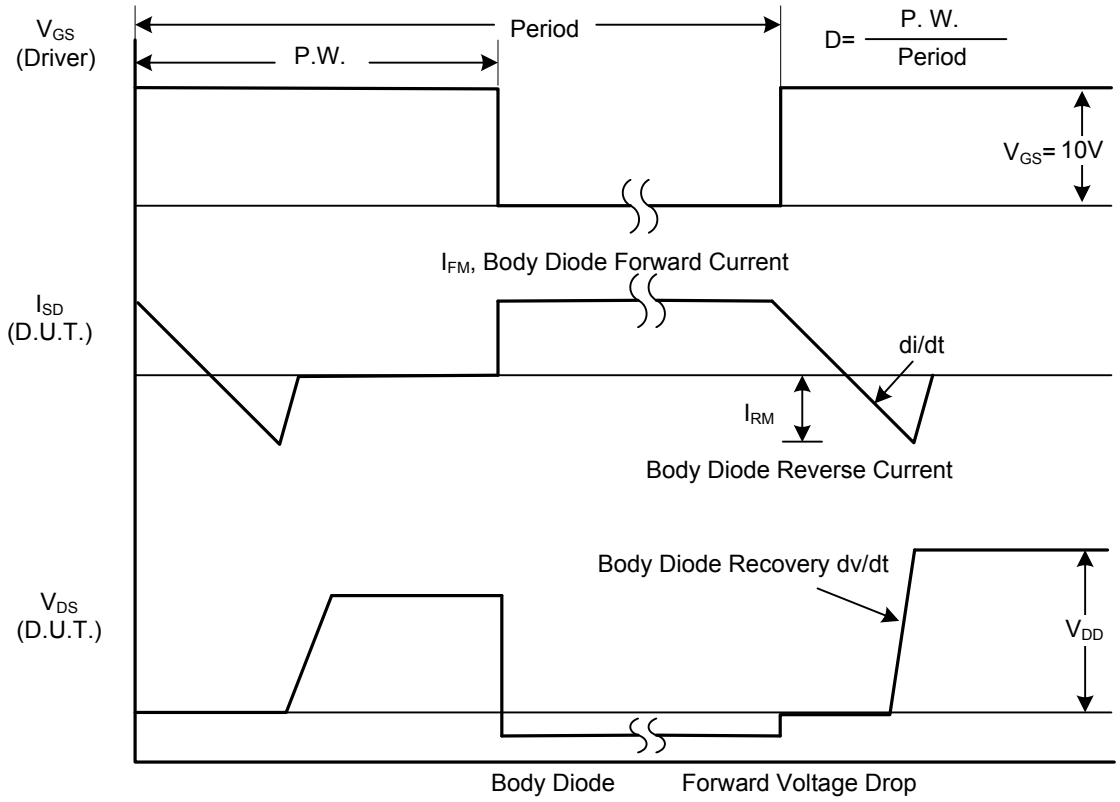

Fig. 1B Peak Diode Recovery dv/dt Waveforms

■ TEST CIRCUITS AND WAVEFORMS(Cont.)

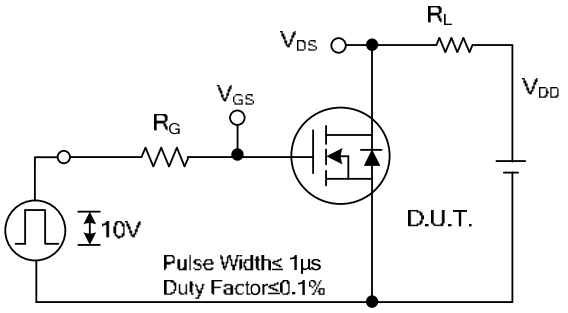

Fig. 2A Switching Test Circuit

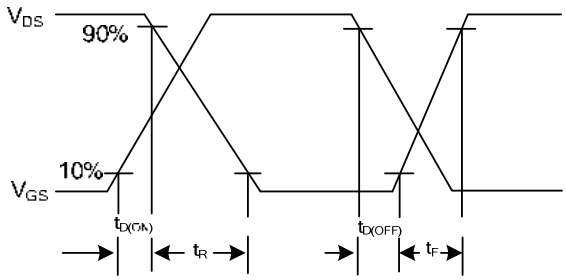

Fig. 2B Switching Waveforms

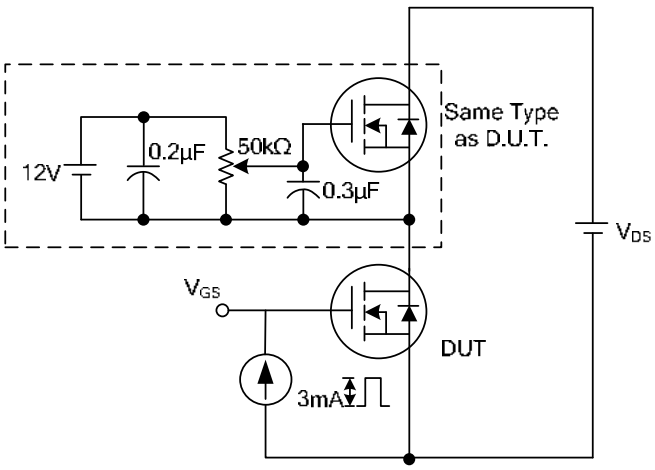

Fig. 3A Gate Charge Test Circuit

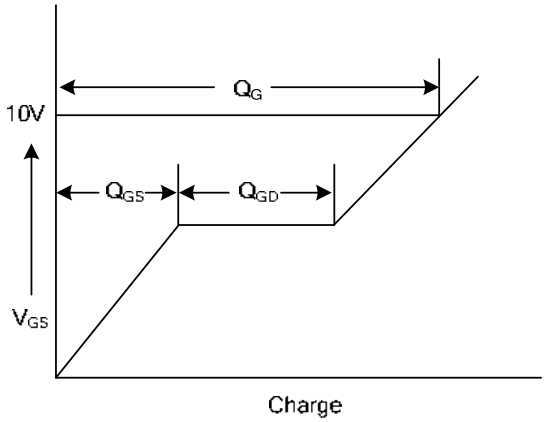

Fig. 3B Gate Charge Waveform

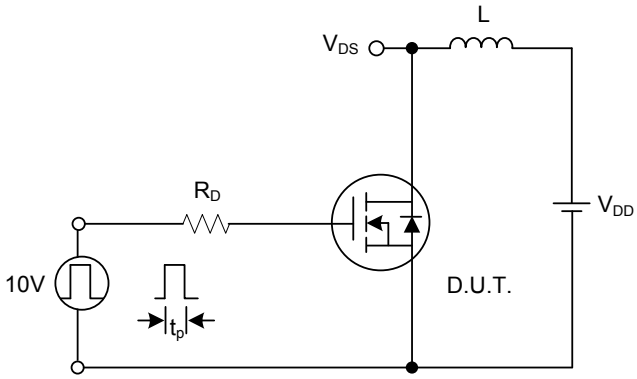

Fig. 4A Unclamped Inductive Switching Test Circuit

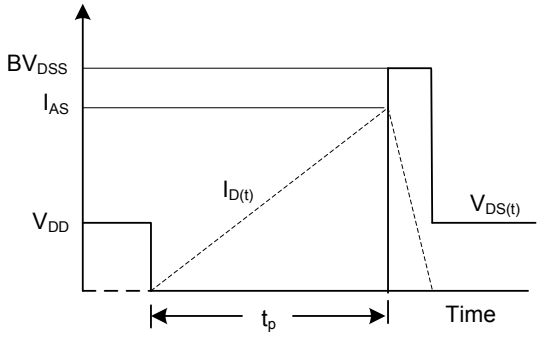

Fig. 4B Unclamped Inductive Switching Waveforms

■ TYPICAL CHARACTERISTICS

Breakdown Voltage Variation vs. Temperature

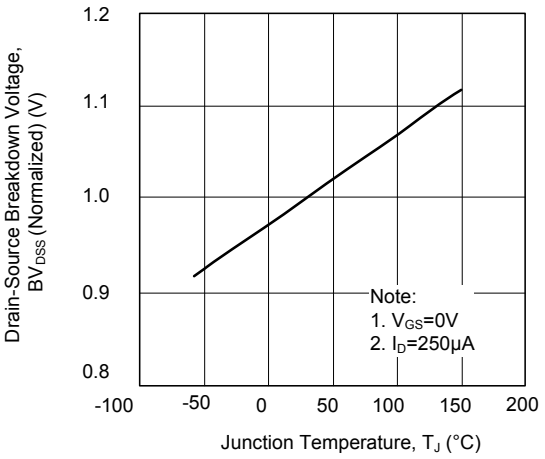

On-Resistance Junction Temperature

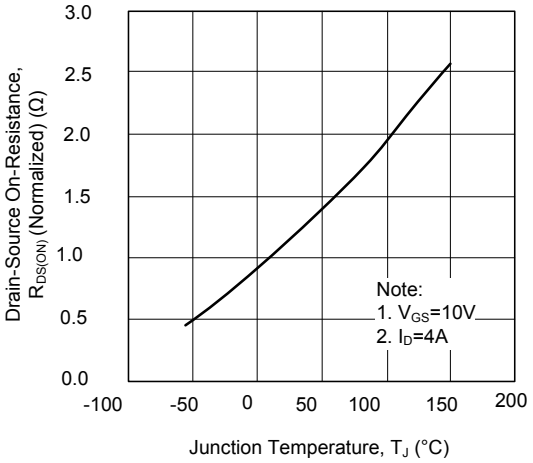

Safe Operating Area - 600V for 4N60-A

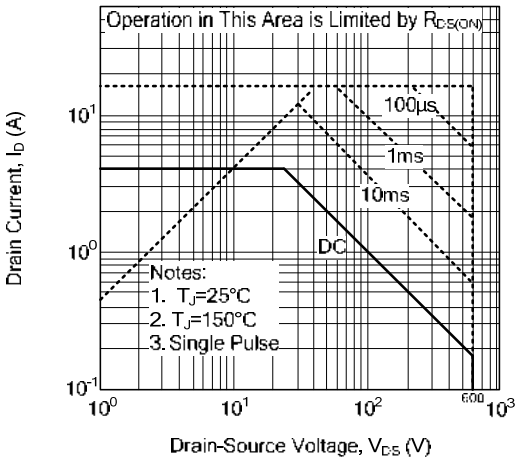

Safe Operating Area - 650V for 4N60-B

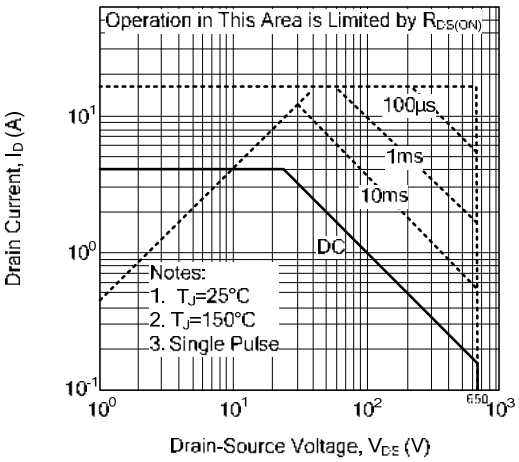

On-State Characteristics

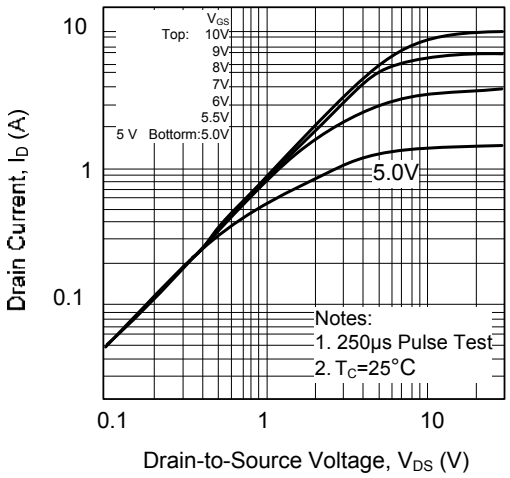

Transfer Characteristics

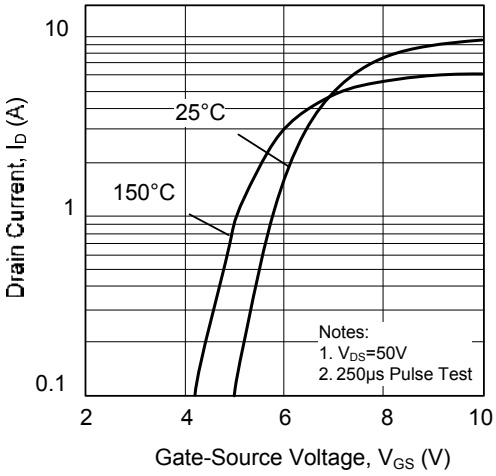

■ TYPICAL CHARACTERISTICS(Cont.)

On-Resistance Variation vs. Drain Current and Gate Voltage

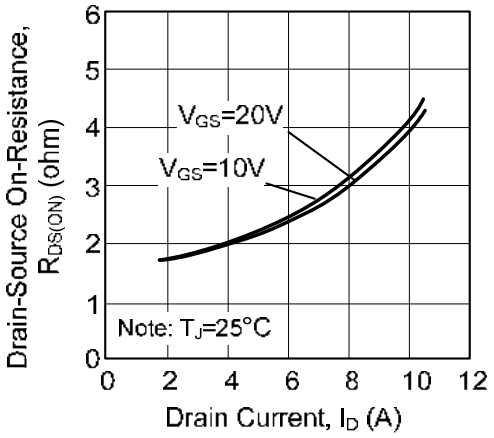

On State Current vs. Allowable Case Temperature

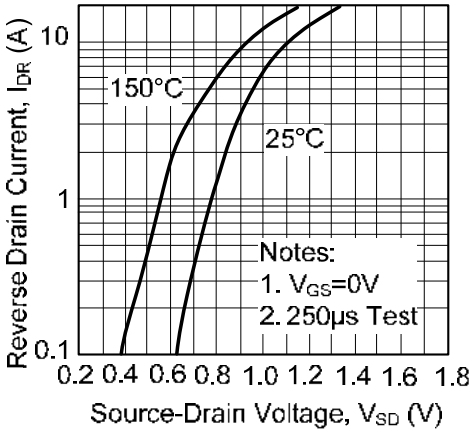

Capacitance Characteristics (Non-Repetitive)

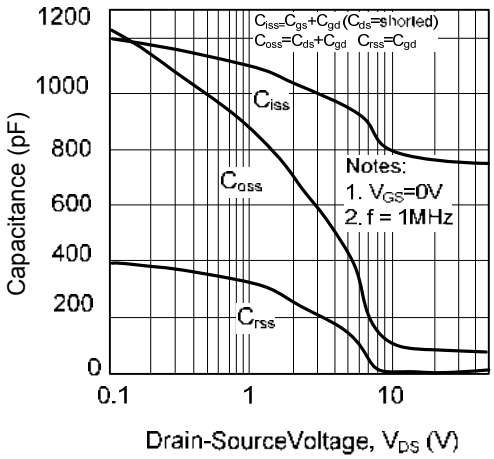

Gate Charge Characteristics

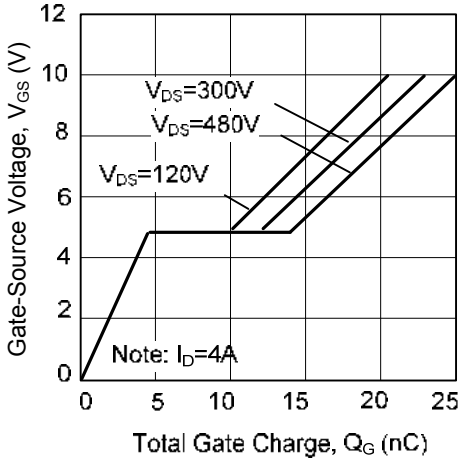

Transient Thermal Response Curve

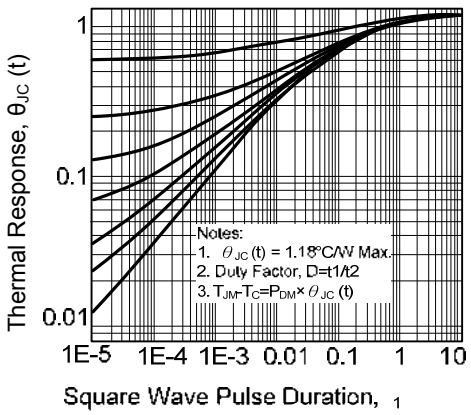

Power Dissipation

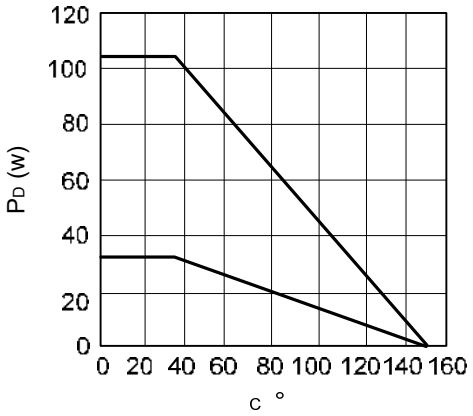

■ TO-220F PACKAGE OUTLINE DIMENSIONS

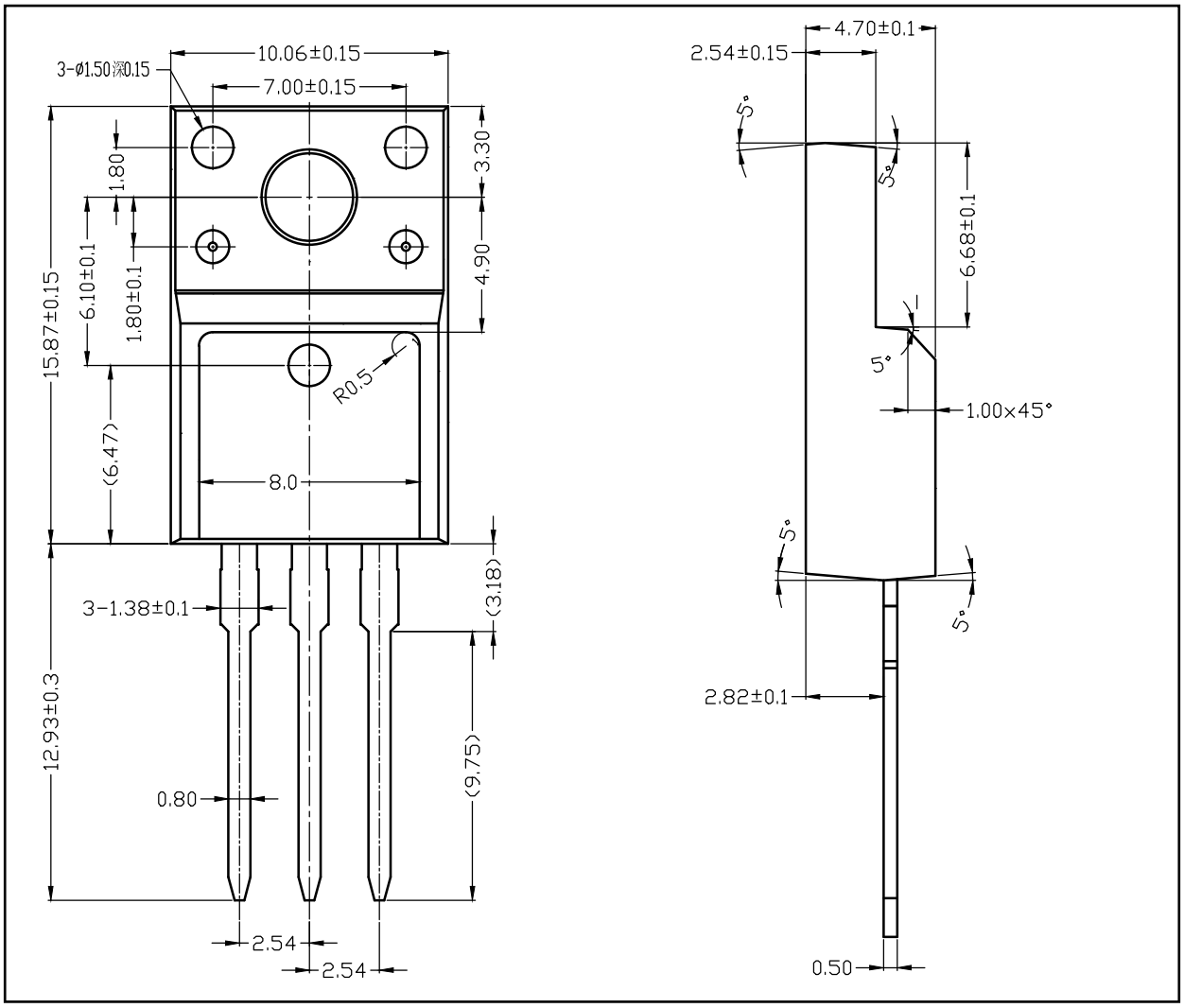
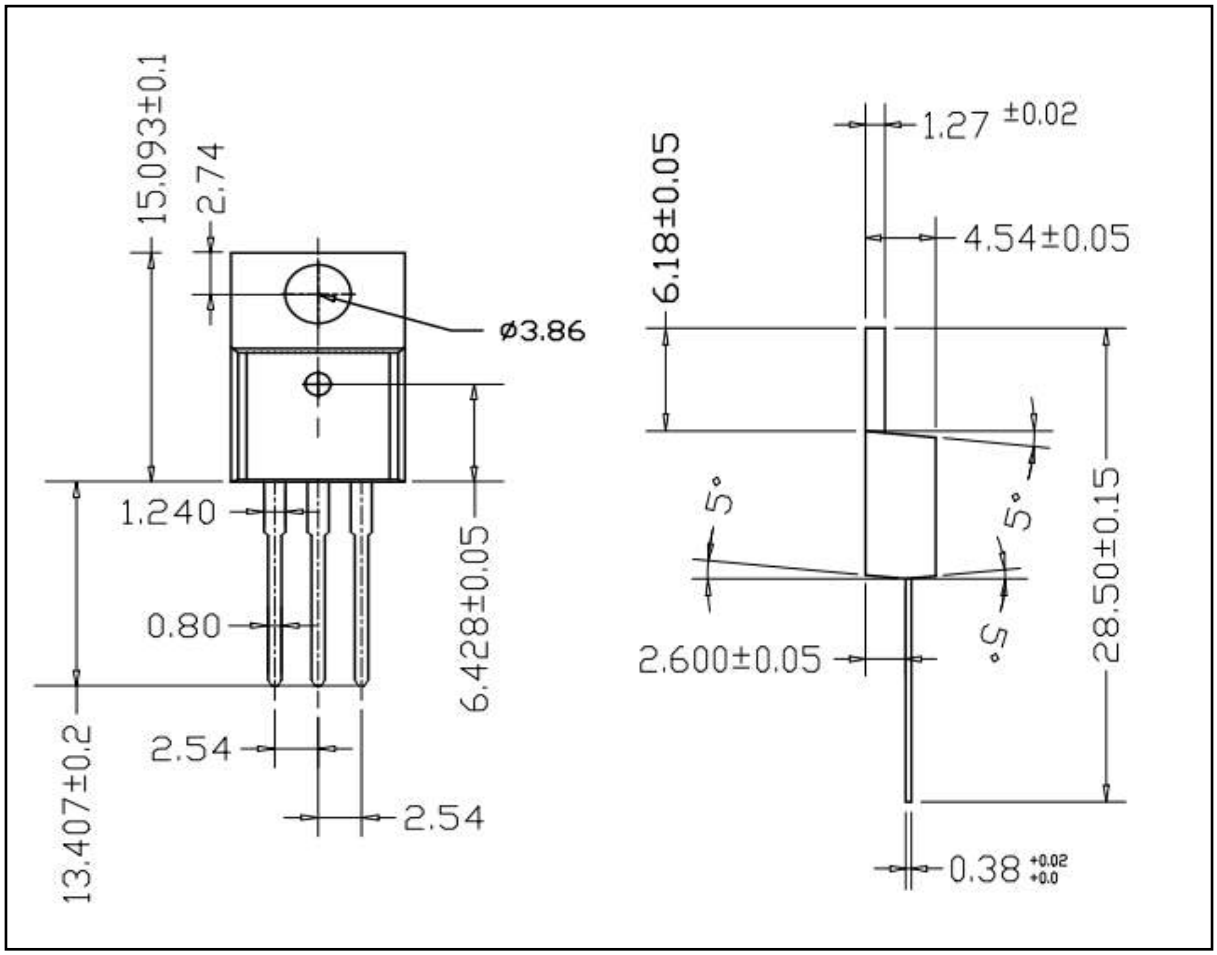
■ TO-220 PACKAGE OUTLINE DIMENSIONS