Symbol

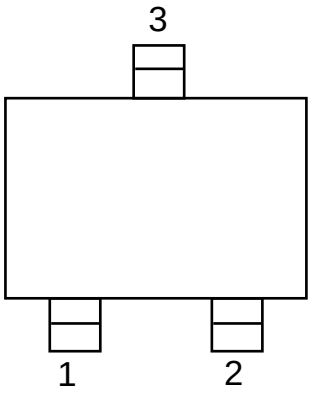

1:Gate
2:Source
3:Drain

■ FEATURES

- S-D terminal ESD Protect design
- S-D terminal EMI Filter design
- Air Electrostatic Discharge: ±4KV
- Contact Electrostatic Discharge: ±2KV
- Especially suited for use in electret condenser Microphone
- Excellent voltage characteristics.
- Excellent transient characteristics.

■ ORDER INFORMATION

Order codes		Package	Packing
Halogen-Free	Halogen-Free		
N/A	MOT504B7	SOT-723	8000pieces/Reel

■ABSOLUTE MAXIMUM RATINGS (T_C= 25°C unless otherwise noted)

Parameter	Symbol	Ratings	UNIT
Gate-to-Drain Voltage	V_{GDO}	-20	V
Gate Current	I_G	10	mA
Drain current	I_D	1	mA
Allowable Power Dissipation	P_D	100	mW
Junction Temperature	Tj	150	℃
Storage Temperature	Tstg	-55to+150	℃

■This MOT504B7 is classified by IDSS as follows:(unit:uA)

IDSS	110-210	210-310	310-480

■ELECTRICAL CHARACTERISTICS (T_C= 25°C unless otherwise noted)

Parameter	Symbol	Conditions	min	typ	max	Unit
Gate-to-Drain Breakdown Voltage	V(BR)GDO	IG=-100μA	-20	-	-	V
Cutoff Voltage	VGS(off)	VDS=3V,ID=1μA	-0.2	-0.6	-1.2	V
Zero-Gate Voltage Drain Current	IDSS	VDS=3V，VGS=0	40	-	500	μA
Forward Transfer Admittance	｜yfs｜	VDS=3V，VGS=0，F=1KHZ	0.4	1.2	-	ms
Input Capacitance	Ciss	VDS=3V，VGS=0，F=1MHZ	-	3.5	-	pF
Reverse Transfer Capacitance	Crss	VDS=3V，VGS=0，F=1MHZ	-	0.65	-	pF

■CONTINUED FORM PRECEDING PAGS.

Parameter	Symbol	Conditions	min	typ	max	Unit
[Ta=25℃,VCC=4.5V.RL=1KΩ,Cin=15pF.See specified Test Circuit.]						
Voltage Gain	G_V	V_{IN}=10mV.f=1KHZ	-	-3.0		dB
Reduced Voltage Characteristics	Δ GVV	V_{IN}=10mV.f=1KHZ.VCC=4.5→1.5V	-	-1.2	-3.5	dB
Frequency Characteristics	Δ Gvf	f=1KHZ to 110Hz	-	-	-1.0	dB
Input Resistance	Z_{IN}	f=1KHZ	25	-	-	MΩ
Output Resistance	Z_O	f=1KHZ	-	1000	-	Ω
Total Harmonic Distorition	THD	V_{IN}=30mV.f=1KHZ	-	1.0	-	%
Output Noise Voltage	VNO	V_{IN}=0.A curve	-	-	-110	dB

■TEST CIRCUIT

Voltage gain

Frequency Characteristics

Distortion

Reduced Voltage Characteristics

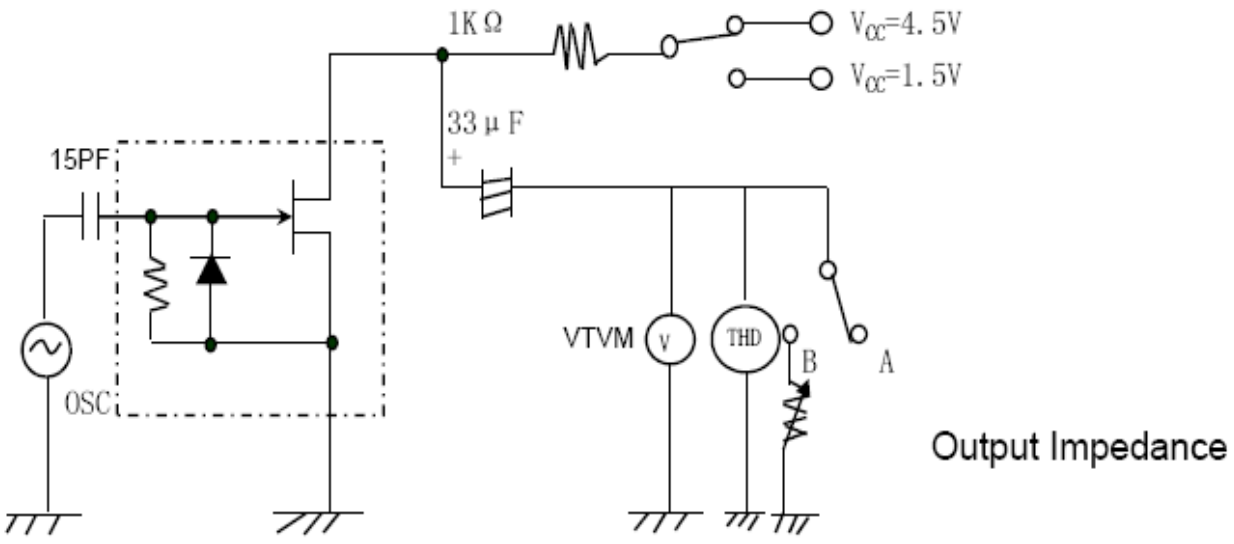

■ SOT-723 PACKAGE OUTLINE DIMENSIONS

