■ PRODUCT CHARACTERISTICS

VDSS	600V
R_{DS}(on)Typ(@V_{GS} =10 V)	2.0Ω
Qg@type	46nC
ID	5A

Symbol

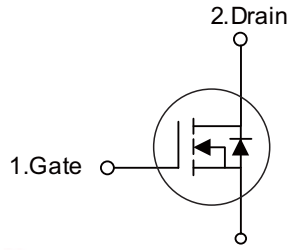

■ APPLICATIONS

- High frequency switching mode power supply
- Electronic ballast
- LED power supply

■ FEATURES

* Fast Switching Capability
* Avalanche Energy Specified
* Improved dv/dt Capability, High Ruggedness



TO-220

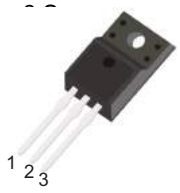

TO-220F

■ ORDER INFORMATION

Order codes		Package	Packing
Halogen-Free	Halogen		
N/A	MOT5N60F	TO-220F	50 pieces/Tube
N/A	MOT5N60A	TO-220	50 pieces/Tube

■ ABSOLUTE MAXIMUM RATINGS (T_C = 25°C, unless otherwise specified)

PARAMETER		SYMBOL	RATINGS	UNIT
Drain-Source Voltage		V_{DSS}	600	V
Gate-Source Voltage		V_{GSS}	±30	V
Drain Current	Continuous	I_D	5.0	A
	Pulsed (Note 2)	I_{DM}	20	A
Avalanche Current (Note 2)		I_{AR}	4.0	A
Avalanche Energy	Single Pulsed (Note 3)	E_{AS}	80	mJ
Peak Diode Recovery dv/dt (Note 4)		dv/dt	3.25	V/ns
Power Dissipation	TO-220	P_D	106	W
	TO-220F		36	W
Junction Temperature		T_J	+150	°C
Storage Temperature		T_{STG}	-55 ~ +150	°C

Notes: 1. Absolute maximum ratings are those values beyond which the device could be permanently damaged. Absolute maximum ratings are stress ratings only and functional device operation is not implied.
2. Repetitive Rating: Pulse width limited by maximum junction temperature.
3. L = 10mH, I_{AS} = 4.0A, V_{DD} = 50V, R_G = 25Ω, Starting T_J = 25°C
4. I_{SD} ≤5.0A, di/dt ≤ 200A/μs, V_{DD} ≤ BV_{DSS}, Starting T_J = 25°C

■ ELECTRICAL CHARACTERISTICS (T_C=25°C, unless otherwise noted)

PARAMETER		SYMBOL	TEST CONDITIONS	MIN	TYP	MAX	UNIT
Off characteristics							
Drain-Source Breakdown Voltage		BV_{DSS}	V_{GS}=0V, I_D=250μ	600	-	-	V
Drain-Source Leakage Current		I_{DSS}	V_{DS}=600V, V_{GS}=0V	-	-	1	μA
Gate-Source Leakage Current	Forward	I_{GSS}	V_{GS}=30V, V_{DS}=0V	-	-	100	nA
	Reverse		V_{GS}=-30V, V_{DS}=0V	-	-	-100	
On characteristics							
Gate Threshold Voltage		$V_{GS(TH)}$	V_{DS}=V_{GS}, I_D=250μA	2.0	-	4.0	V
Static Drain-Source On-State Resistance		$R_{DS(ON)}$	V_{GS}=10V, I_D=2.5A	-	2.0	2.4	Ω
Dynamic characteristics							
Input Capacitance		C_{ISS}	V_{GS}=0V, V_{DS}=25V, f=1.0MHz	-	480	-	pF
Output Capacitance		C_{OSS}		-	60	-	pF
Reverse Transfer Capacitance		C_{RSS}		-	6.5	-	pF
Switching characteristics							
Total Gate Charge (Note 1)		Q_G	V_{DS}=50V, I_D=1.3A, V_{GS}=10V I_G=100μA (Note 1, 2)	-	46	-	nC
Gate to Source Charge		Q_{GS}		-	4.6	-	nC
Gate to Drain Charge		Q_{GD}		-	6.0	-	nC
Turn-ON Delay Time (Note 1)		$t_{D(ON)}$	V_{DD}=30V, V_{GS}=10V, I_D=0.5A, R_G=25Ω (Note 1, 2)	-	42	-	ns
Rise Time		t_R		-	44	-	ns
Turn-OFF Delay Time		$t_{D(OFF)}$		-	120	-	ns
Fall-Time		t_F		-	38	-	ns
Source-drain diode and characteristics							
Maximum Body-Diode Continuous Current		I_S		-	-	5	A
Maximum Body-Diode Pulsed Current		I_{SM}		-	-	20	A
Drain-Source Diode Forward Voltage (Note 1)		V_{SD}	I_S=5.0A, V_{GS}=0V	-	-	1.4	V
Body Diode Reverse Recovery Time (Note 1)		t_{rr}	I_S=5.0A, V_{GS}=0V, dI_F/dt=100A/μs	-	390	-	nS
Body Diode Reverse Recovery Charge		Q_{rr}		-	1.6	-	μC

Note: 1. Pulse Test: Pulse width ≤ 300μs, Duty cycle ≤ 2%
2. Essentially independent of operating temperature

■ TEST CIRCUITS AND WAVEFORMS

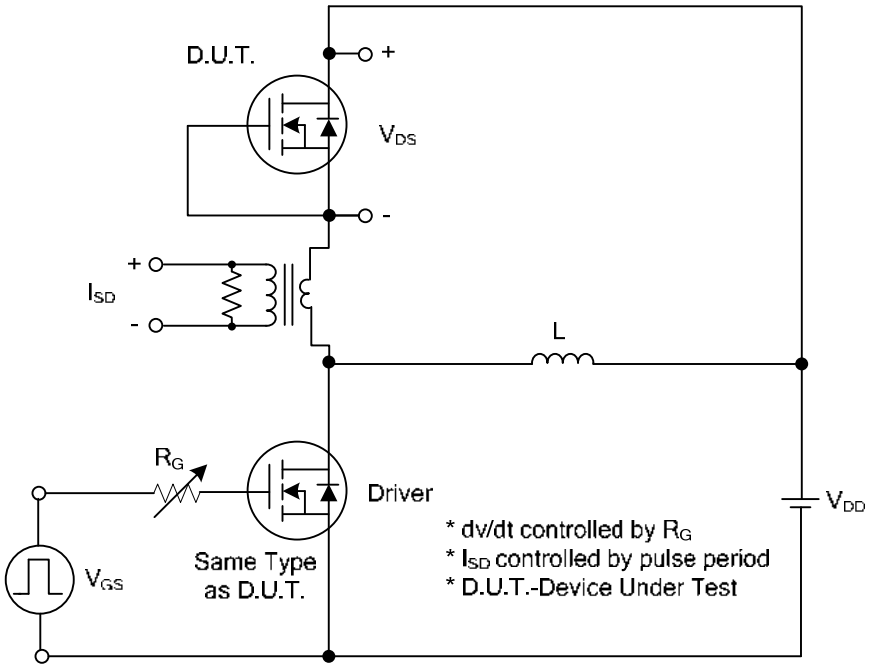

Peak Diode Recovery dv/dt Test Circuit

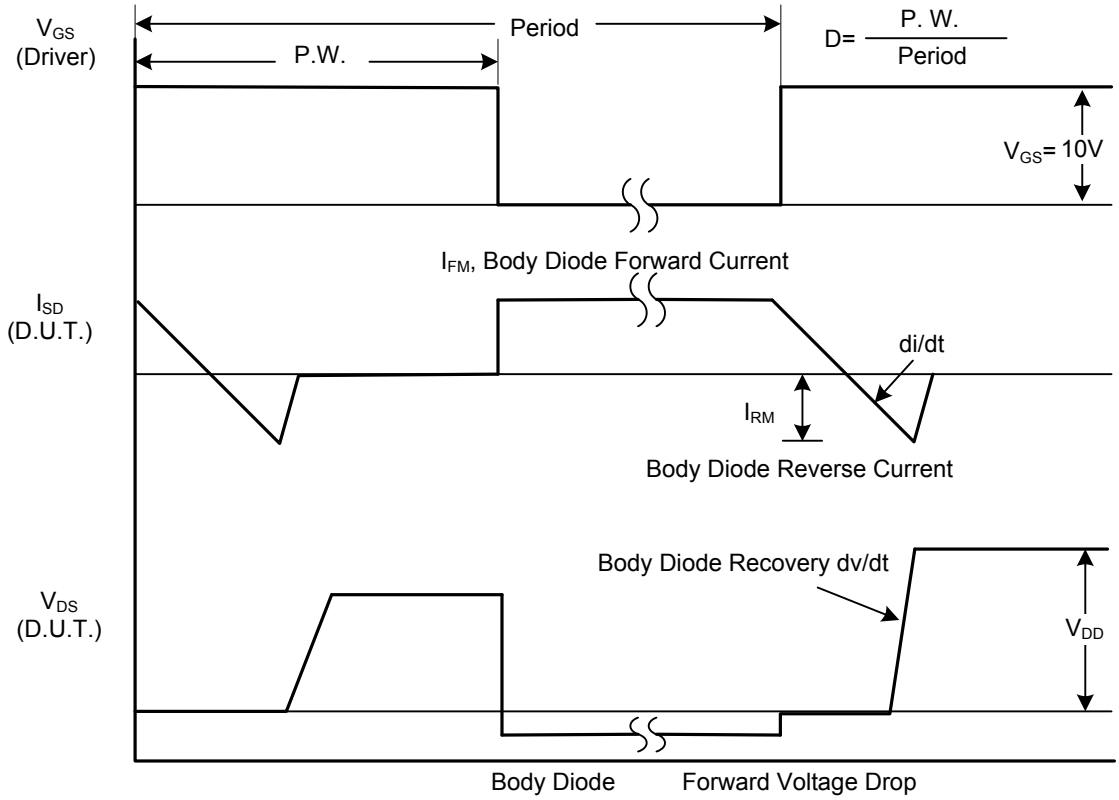

Peak Diode Recovery dv/dt Waveforms

■ TEST CIRCUITS AND WAVEFORMS(Cont.)

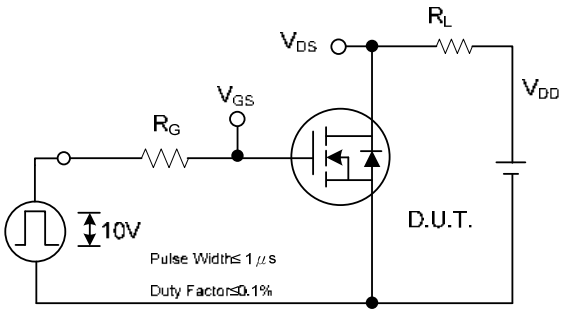

Switching Test Circuit

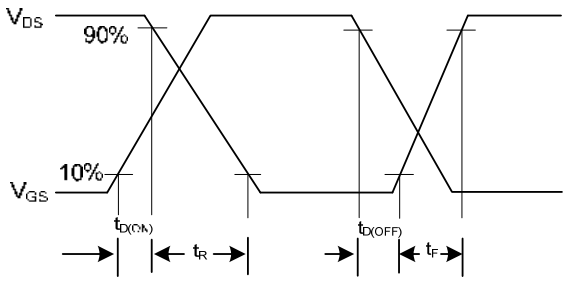

Switching Waveforms

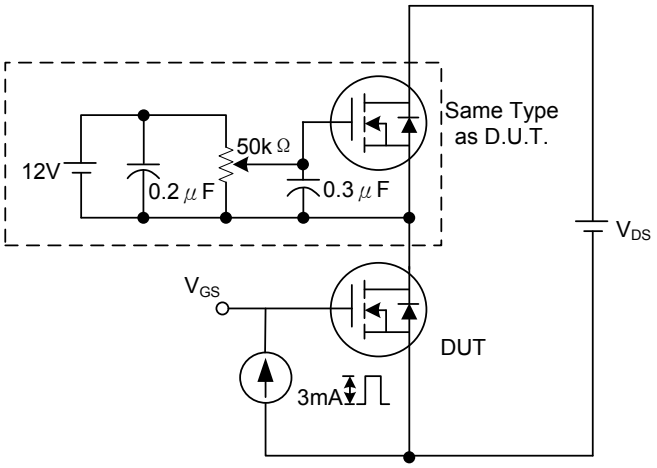

Gate Charge Test Circuit

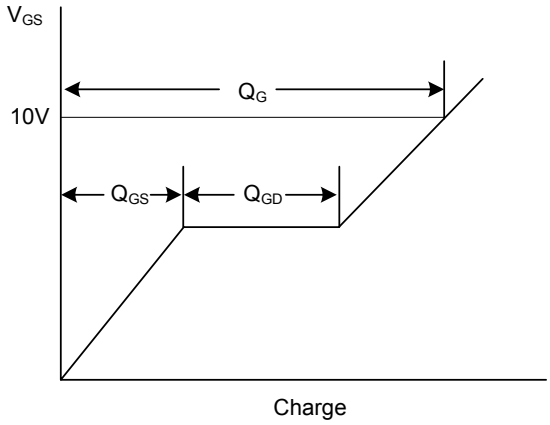

Gate Charge Waveform

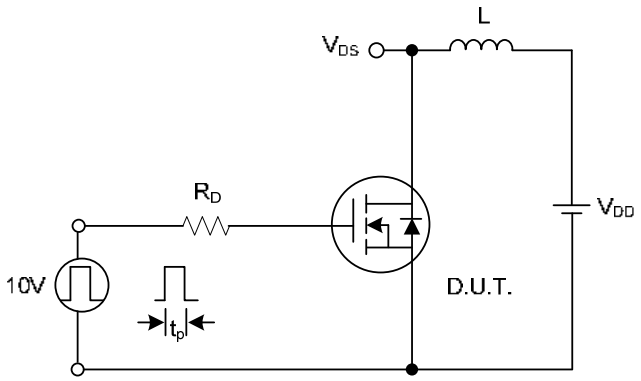

Unclamped Inductive Switching Test Circuit

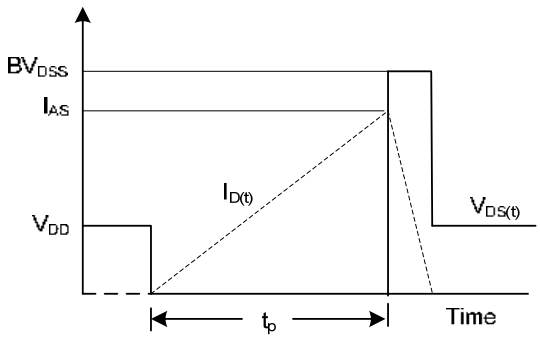

Unclamped Inductive Switching Waveforms

■ TO-220F PACKAGE OUTLINE DIMENSIONS

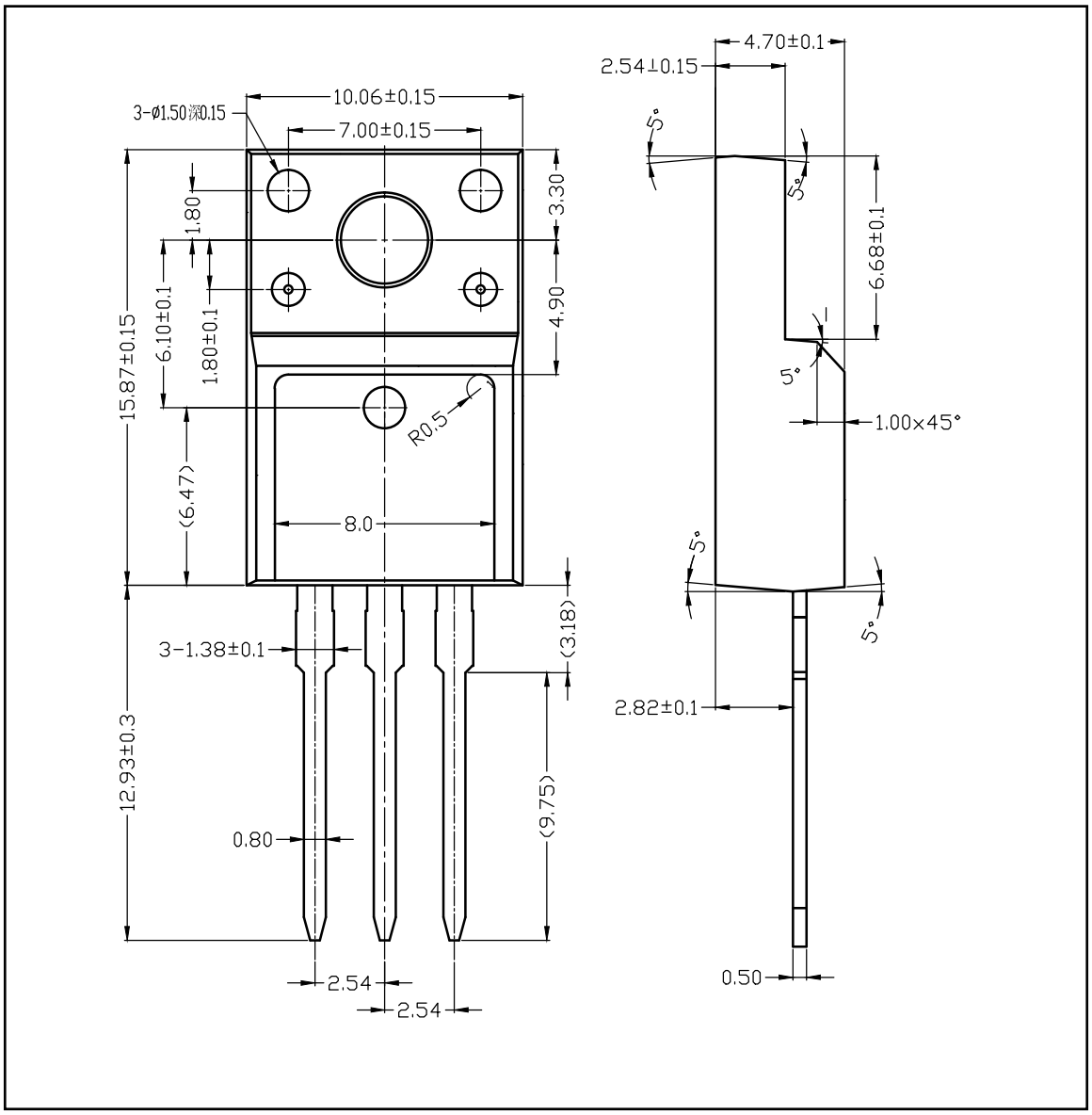

■ TO-220 PACKAGE OUTLINE DIMENSIONS

