■ PRODUCT CHARACTERISTICS

VDSS	600V
R_{DS}(on)Typ(@V_{GS} =10 V)	1.1Ω
Qg@type	32nC
ID	7A

Symbol

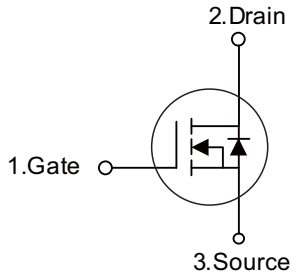

■ APPLICATIONS

* High frequency switching mode power supply
* Electronic ballast
* LED power supply

■ FEATURES

* Fast Switching Capability
* Avalanche Energy Tested
* Improved dv/dt Capability, High Ruggedness

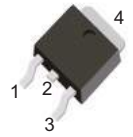

TO-252

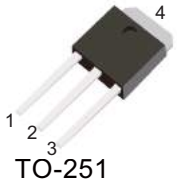

TO-251

■ ORDER INFORMATION

Order codes		Package	Packing
Halogen-Free	Halogen		
N/A	MOT7N60C	TO-251	70 pieces/Tube
N/A	MOT7N60D	TO-252	2500 pieces/Reel

■ ABSOLUTE MAXIMUM RATINGS (T_C = 25°C, unless otherwise specified)

PARAMETER		SYMBOL	RATINGS	UNIT
Drain-Source Voltage		V_{DSS}	600	V
Gate-Source Voltage		V_{GSS}	±30	V
Continuous Drain Current		I_D	7	A
Pulsed Drain Current (Note 2)		I_{DM}	14	A
Avalanche Energy	Single Pulsed (Note 3	E_{AS}	115	mJ
Peak Diode Recovery dv/dt (Note 4)		dv/dt	3.2	V/ns
Power Dissipation	TO-251/TO-252	P_D	52	W
Junction Temperature		T_J	+150	°C
Storage Temperature		T_{STG}	-55 ~ +150	°C

Notes: 1. Absolute maximum ratings are those values beyond which the device could be permanently damaged. Absolute maximum ratings are stress ratings only and functional device operation is not implied
2. Repetitive Rating: Pulse width limited by maximum junction temperature.
3. L = 1.0mH, I_{AS} = 15.2A, V_{DD} = 50V, R_G = 25 Ω, Starting T_J = 25°C
4. I_{SD} ≤ 7.0A, di/dt ≤200A/μs, V_{DD} ≤ BV_{DSS}, Starting T_J = 25°C

■ ELECTRICAL CHARACTERISTICS (T_C=25°C, unless otherwise noted)

PARAMETER		SYMBOL	TEST CONDITIONS	MIN	TYP	MAX	UNIT
Off characteristics							
Drain-Source Breakdown Voltage		BV_{DSS}	V_{GS} = 0V, I_D = 250μA	600	-	-	V
Drain-Source Leakage Current		I_{DSS}	V_{DS} = 600V, V_{GS} = 0V	-	-	1	μA
Gate- Source Leakage Current	Forward	I_{GSS}	V_{GS} = 30V, V_{DS} = 0V	-	-	100	nA
	Reverse		V_{GS} = -30V, V_{DS} = 0V	-	-	-100	nA
Breakdown Voltage Temperature Coefficient		$\triangle BV_{DSS}/\triangle T_J$	I_D=250μA,Referenced to 25°C	-	0.67	-	V/°C
On characteristics							
Gate Threshold Voltage		$V_{GS(TH)}$	V_{DS} = V_{GS}, I_D = 250μA	2.0	-	4.0	V
Static Drain-Source On-State Resistance		$R_{DS(ON)}$	V_{GS} = 10V, I_D = 3.5A	-	-	1.2	Ω
Dynamic characteristics							
Input Capacitance		C_{ISS}	V_{DS}=25V, V_{GS}=0V, f=1.0 MHz	-	1000	-	pF
Output Capacitance		C_{OSS}		-	120	-	pF
Reverse Transfer Capacitance		C_{RSS}		-	17	-	pF
Switching characteristics							
Turn-On Delay Time		$t_{D(ON)}$	V_{DD} =300V, I_D =7.0A, R_G =25Ω (Note 1, 2)	-	55	-	ns
Turn-On Rise Time		t_R		-	110	-	ns
Turn-Off Delay Time		$t_{D(OFF)}$		-	220	-	ns
Turn-Off Fall Time		t_F		-	180	-	ns
Switching characteristics							
Total Gate Charge		Q_G	V_{DS}=480V, I_D=7.0A, V_{GS}=10V (Note 1, 2)	-	32	-	nC
Gate-Source Charge		Q_{GS}		-	9	-	nC
Gate-Drain Charge		Q_{GD}		-	22	-	nC
Drain-source diode characteristics and maximum ratings							
Drain-Source Diode Forward Voltage		V_{SD}	V_{GS} = 0V, I_S = 7.0 A	-	-	1.4	V
Maximum Continuous Forward Current		I_S		-	-	7	A
Maximum Pulsed Forward Current		I_{SM}		-	-	28	A
Reverse Recovery Time		t_{rr}	V_{GS} = 0V, I_S = 7.0 A, dI_F / dt = 100A/μs (Note 1)	-	320	-	ns
Reverse Recovery Charge		Q_{RR}		-	2.4	-	μC

Notes: 1. Pulse Test: Pulse width≤300μs, Duty cycle≤2%
2. Essentially independent of operating temperature

■ TEST CIRCUITS AND WAVEFORMS

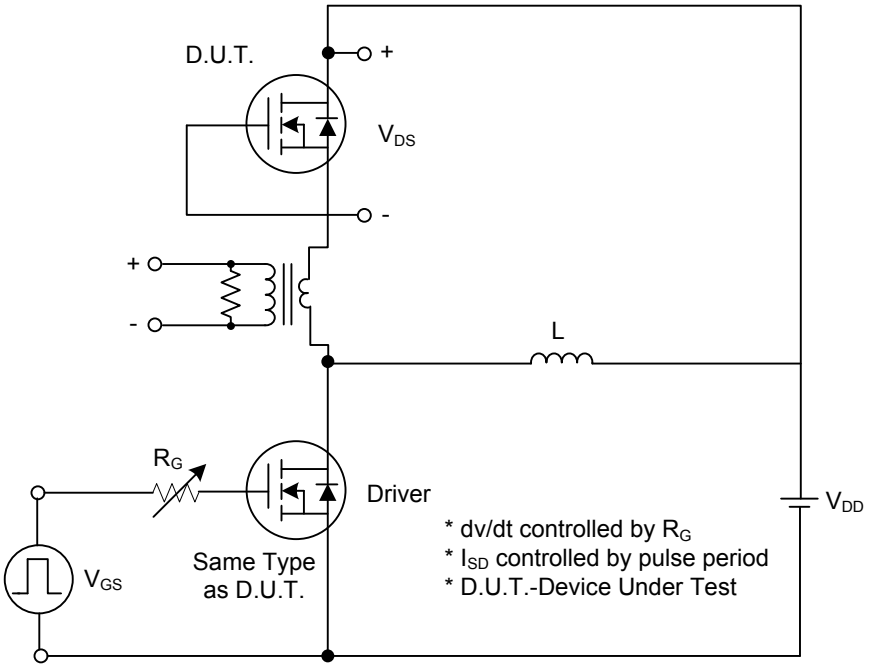

Peak Diode Recovery dv/dt Test Circuit

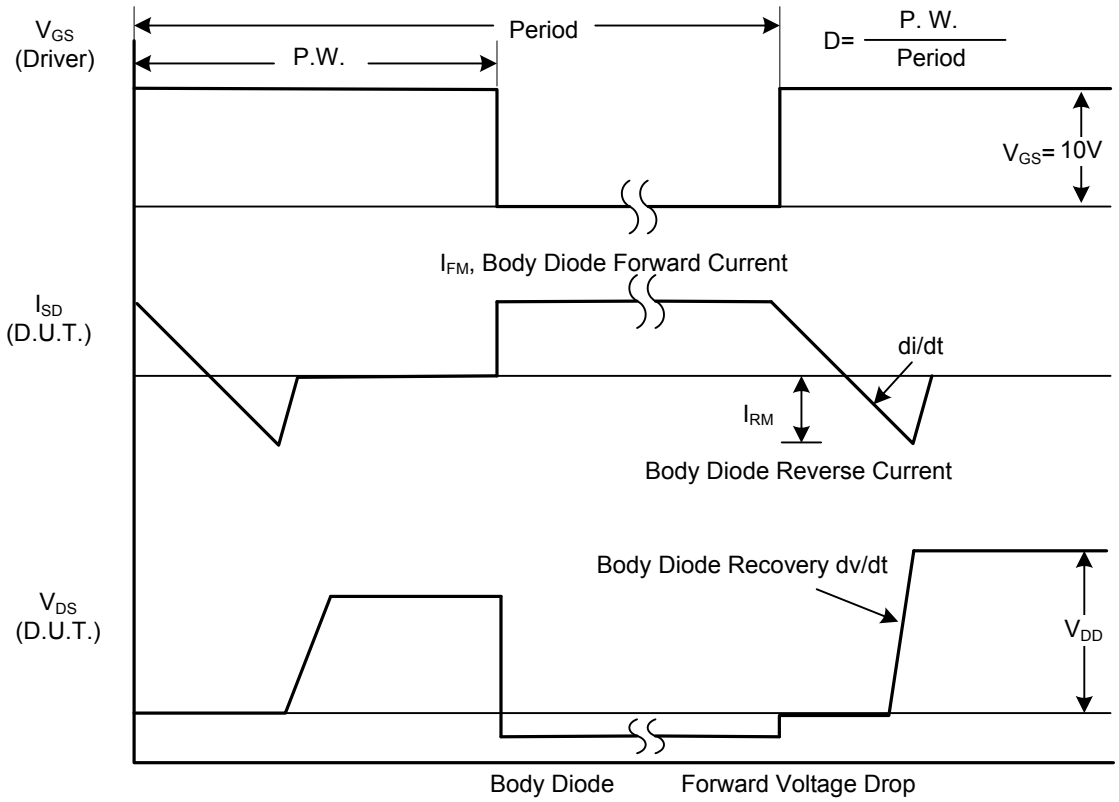

Peak Diode Recovery dv/dt Waveforms

■ TEST CIRCUITS AND WAVEFORMS(Cont.)

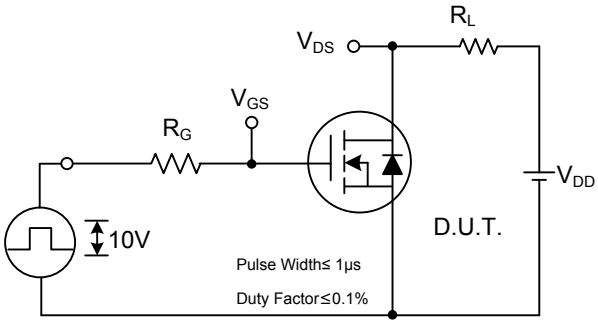

Switching Test Circuit

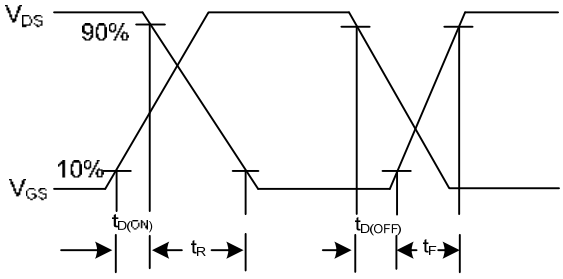

Switching Waveforms

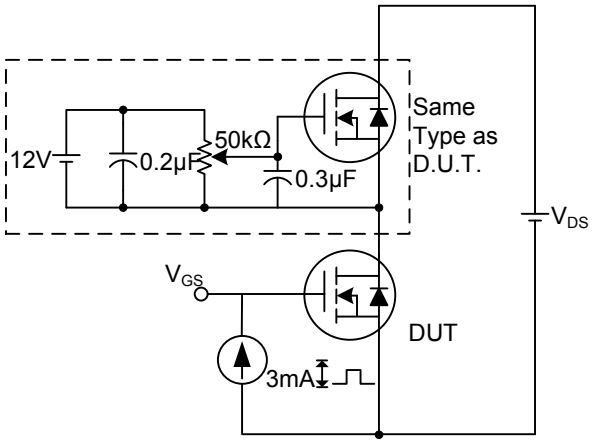

Gate Charge Test Circuit

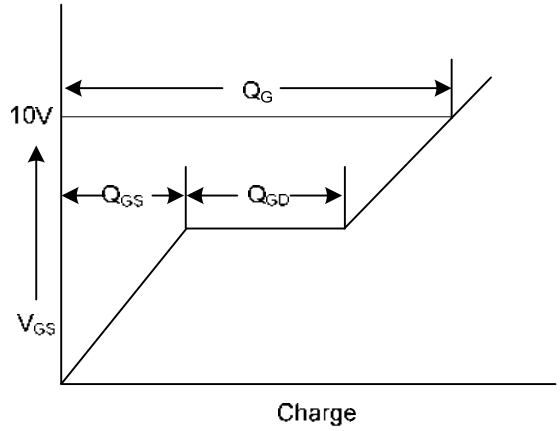

Gate Charge Waveform

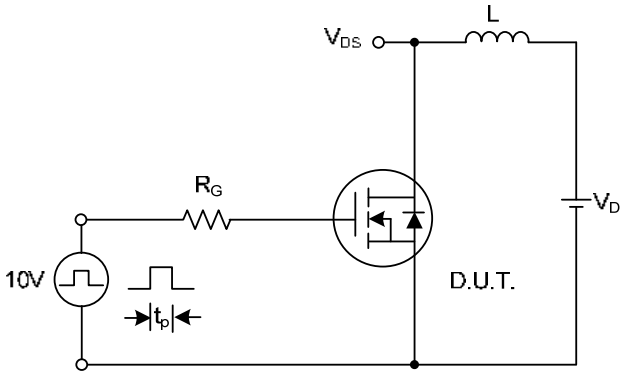

Unclamped Inductive Switching Test Circuit

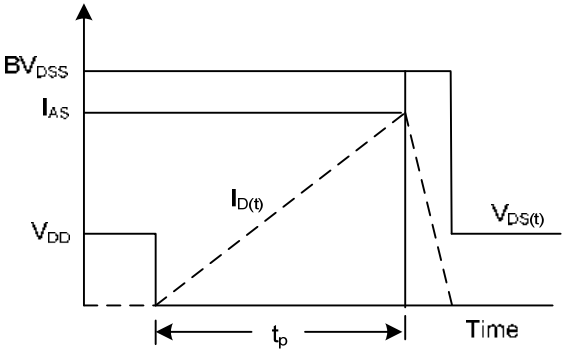

Unclamped Inductive Switching Waveforms

■ TYPICAL CHARACTERISTICS

On-State Characteristics

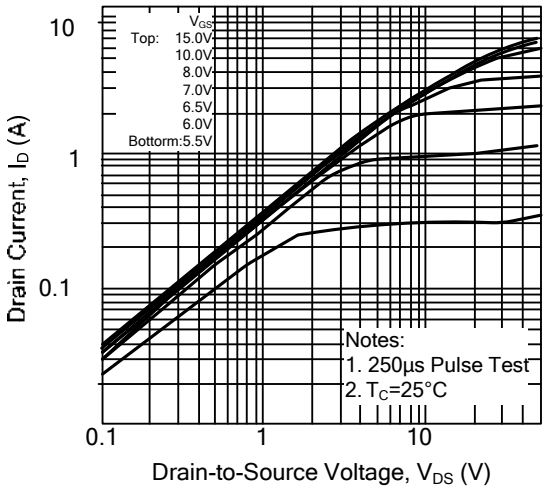

Transfer Characteristics

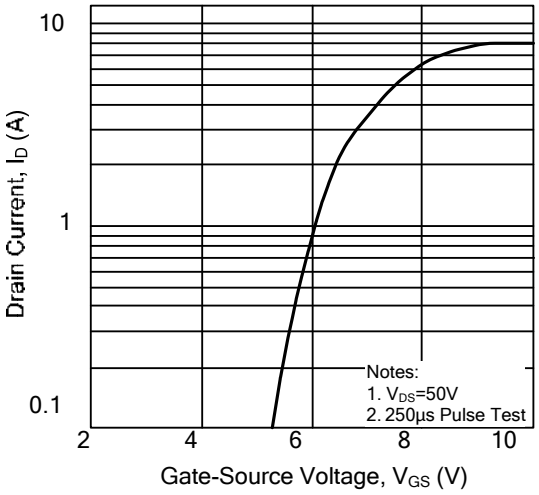

On-Resistance Variation vs.
Drain Current and Gate Voltage

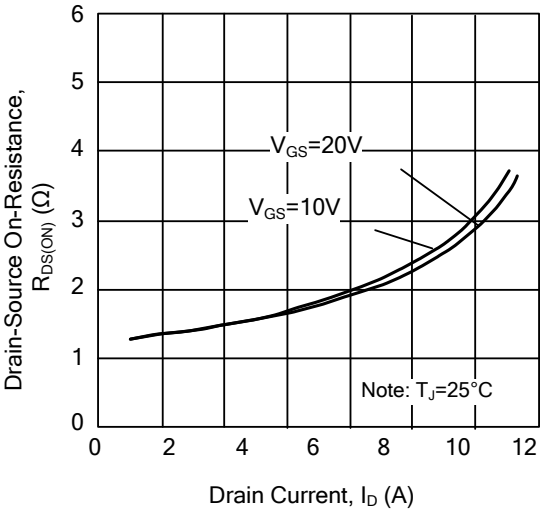

On State Current vs.
Allowable Case Temperature

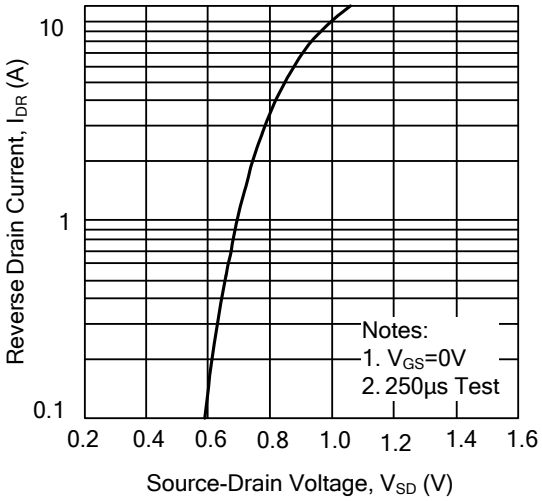

Capacitance Characteristics
(Non-Repetitive)

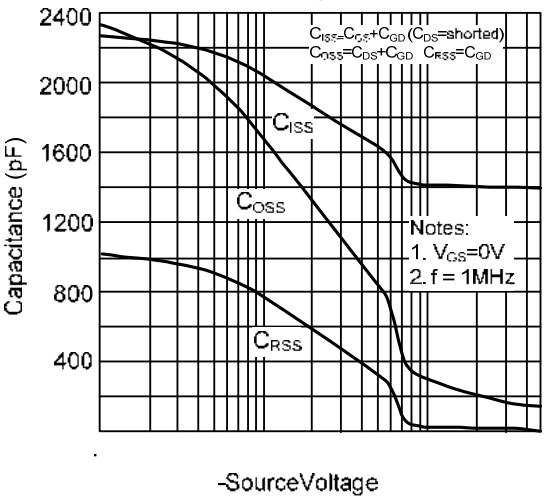

Gate Charge Characteristics

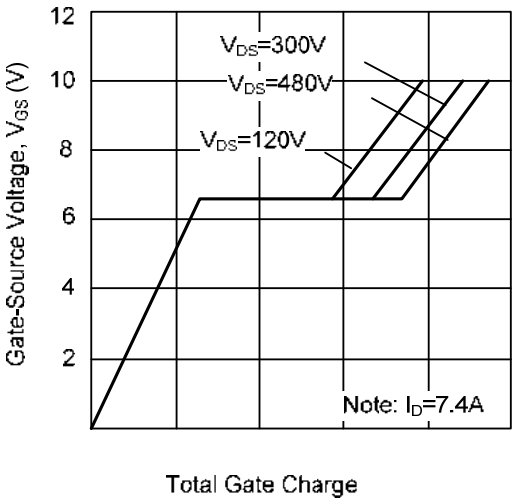

■ TYPICAL CHARACTERISTICS(Cont.)

Breakdown Voltage Variation vs. Junction Temperature

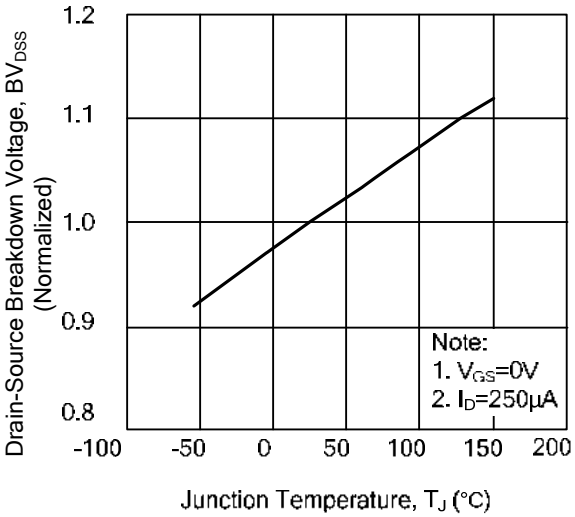

On-Resistance Variation vs. Junction Temperature

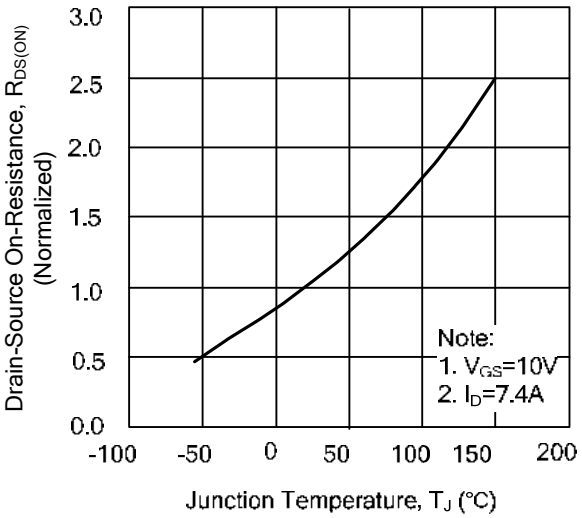

Transient Thermal Response Curve

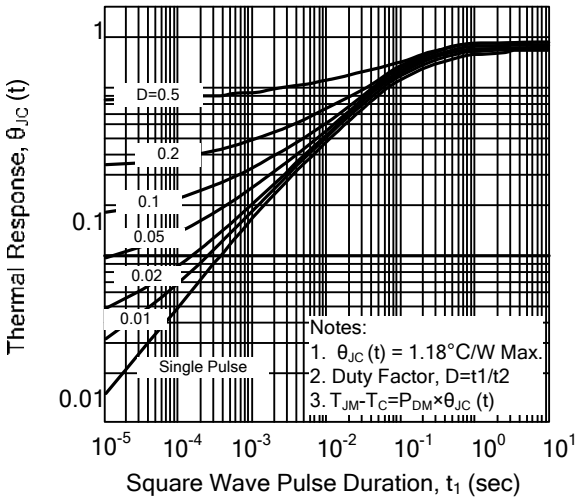

Maximum Drain Current vs. Case Temperature

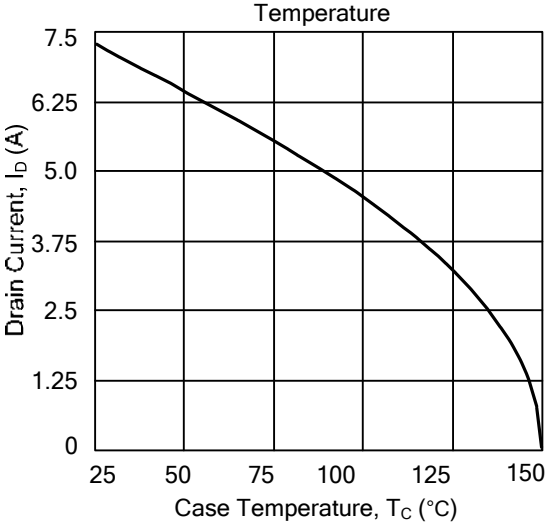

Safe Operating Area – 600V

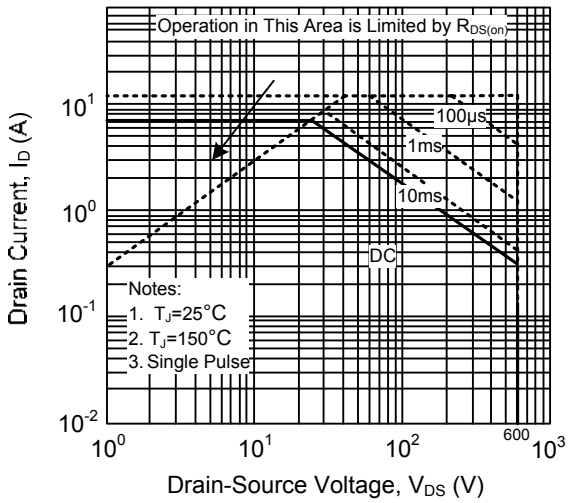

■ TO-252-2L PACKAGE OUTLINE DIMENSIONS

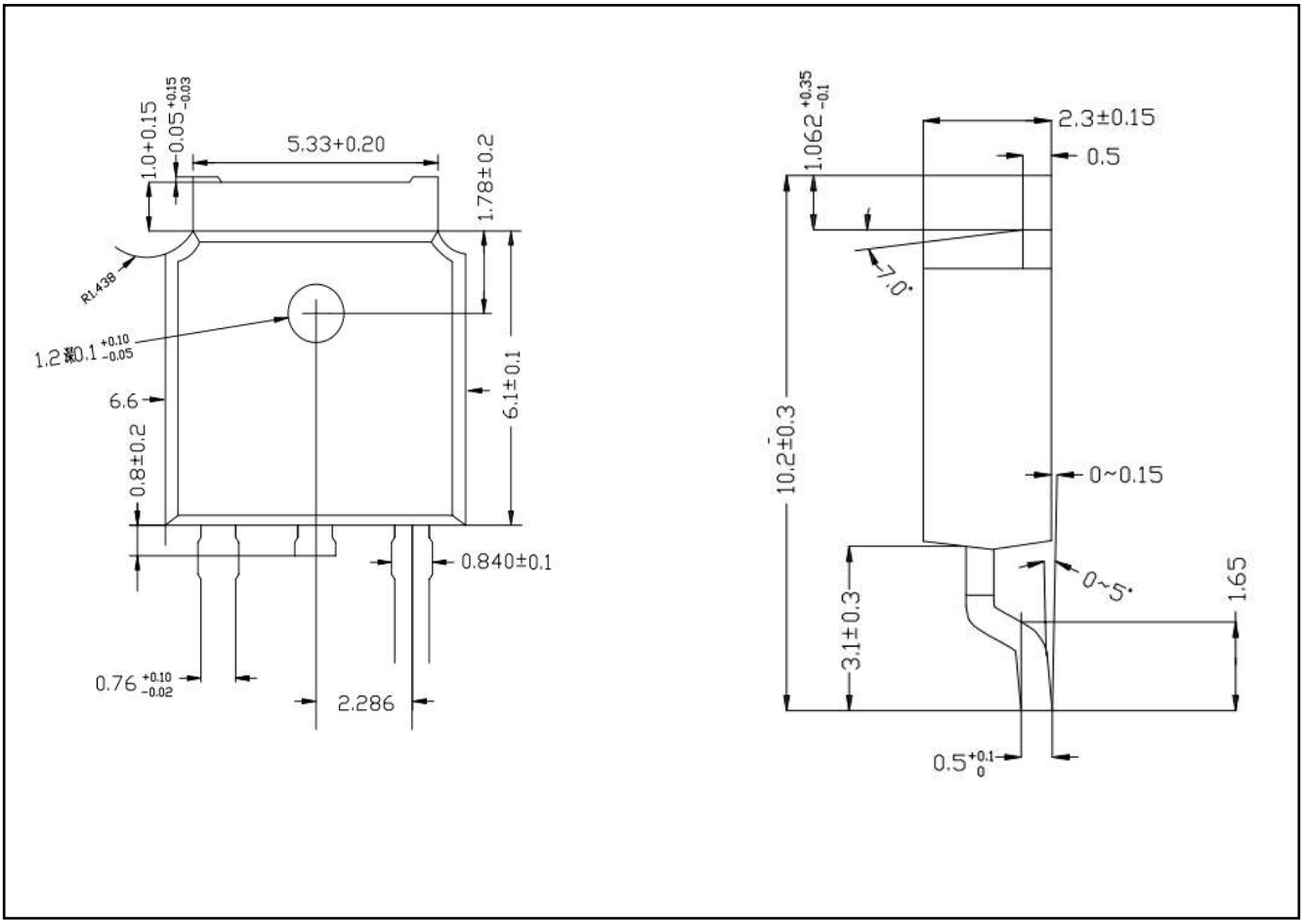
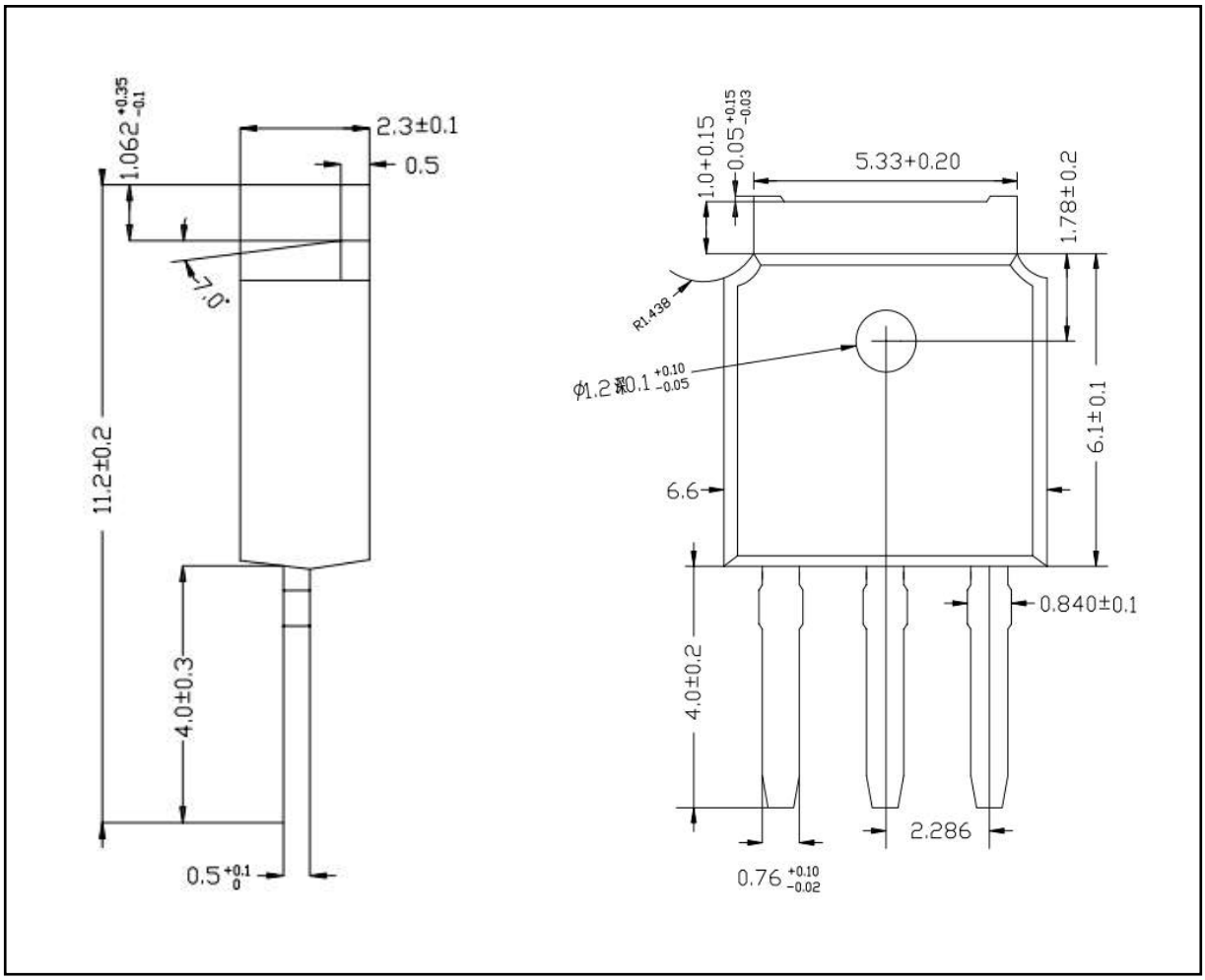
■ TO-251-3L PACKAGE OUTLINE DIMENSIONS