■ PRODUCT CHARACTERISTICS

VDSS	500V
R_{DS}(on)typ(@V_{GS} =10 V)	0.66Ω
Qg@type	35nC
ID	9A

Symbol

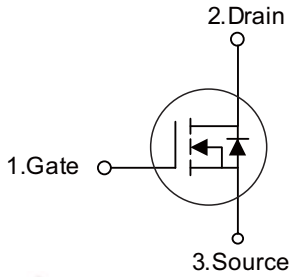

■ APPLICATIONS

- High frequency switching mode power supply
- Electronic ballast
- LED power supply

■ FEATURES

* Fast Switching Capability
* Avalanche Energy Specified
* Improved dv/dt Capability, High Ruggedness



TO-220



TO-220F

■ ORDER INFORMATION

Order codes		Package	Packing
Halogen-Free	Halogen		
N/A	MOT9N50EF	TO-220F	50 pieces/Tube
N/A	MOT9N50EA	TO-220	50 pieces/Tube

■ ABSOLUTE MAXIMUM RATINGS (T_C=25°C, unless otherwise noted)

PARAMETER		SYMBOL	RATINGS	UNIT
Drain-Source Voltage		V_{DSS}	500	V
Gate-Source Voltage		V_{GSS}	±30	V
Drain Current	Continuous (T_C=25°C)	I_D	9 (Note 5)	A
	Pulsed (Note 2)	I_{DM}	36 (Note 5)	A
Avalanche Current (Note 2)		I_{AR}	9	A
Avalanche Energy	Single Pulsed (Note 3)	E_{AS}	360	mJ
	Repetitive (Note 4)	E_{AR}	13.5	mJ
Peak Diode Recovery dv/dt (Note 4)		dv/dt	4.5	V/ns
Power Dissipation		P_D	44	W
Derate above 25°C			0.35	W/°C
Junction Temperature		T_J	+150	°C
Storage Temperature		T_{STG}	-55~+150	°C

Notes: 1. Absolute maximum ratings are those values beyond which the device could be permanently damaged. Absolute maximum ratings are stress ratings only and functional device operation is not implied.
2. Repetitive Rating: Pulse width limited by maximum junction temperature
3. L = 8mH, I_{AS} = 9A, V_{DD} = 50V, R_G = 25Ω, Starting T_J = 25°C
4. I_{SD} ≤ 9A, di/dt ≤ 200A/μs, V_{DD} ≤ BV_{DSS}, Starting T_J = 25°C
5. Drain current limited by maximum junction temperature

■ ELECTRICAL CHARACTERISTICS (T_C=25°C, unless otherwise noted)

PARAMETER		SYMBOL	TEST CONDITIONS	MIN	TYP	MAX	UNIT
OFF CHARACTERISTICS							
Drain-Source Breakdown Voltage		BV_{DSS}	I_D=250μA, V_{GS}=0V	500	-	-	V
Drain-Source Leakage Current		I_{DSS}	V_{DS}=500V, V_{GS}=0V	-	-	1	μA
			V_{DS}=400V, T_C=125°C	-	-	10	
Gate- Source Leakage Current	Forward	I_{GSS}	V_{GS}=+30V, V_{DS}=0V	-	-	+100	nA
	Reverse		V_{GS}=-30V, V_{DS}=0V	-	-	-100	nA
ON CHARACTERISTICS							
Gate Threshold Voltage		$V_{GS(TH)}$	V_{DS}=V_{GS}, I_D=250μA	2.0	-	4.0	V
Static Drain-Source On-State Resistance		$R_{DS(ON)}$	V_{GS}=10V, I_D=4.5A	-	0.66	0.70	Ω
DYNAMIC CHARACTERISTICS							
Input Capacitance		C_{ISS}	V_{GS}=0V, V_{DS}=25V, f=1.0MHz	-	790	-	pF
Output Capacitance		C_{OSS}		-	130	-	pF
Reverse Transfer Capacitance		C_{RSS}		-	18	-	pF
SWITCHING CHARACTERISTICS							
Total Gate Charge		Q_G	V_{GS}=10V, V_{DS}=400V, I_D=9A (Note 1, 2)	-	28	-	nC
Gate to Source Charge		Q_{GS}		-	4	-	nC
Gate to Drain Charge		Q_{GD}		-	15	-	nC
Turn-ON Delay Time		$t_{D(ON)}$	V_{DD}=250V, I_D=9A, R_G=25Ω (Note 1, 2)	-	18	-	ns
Rise Time		t_R		-	65	-	ns
Turn-OFF Delay Time		$t_{D(OFF)}$		-	93	-	ns
Fall-Time		t_F		-	64	-	ns
SOURCE-DRAIN DIODE RATINGS AND CHARACTERISTICS							
Maximum Body-Diode Continuous Current		I_S		-	-	9	A
Maximum Body-Diode Pulsed Current		I_{SM}		-	-	36	A
Drain-Source Diode Forward Voltage		V_{SD}	I_S=9A, V_{GS}=0V	-	-	1.4	V
Body Diode Reverse Recovery Time		t_{rr}	I_S=9A, V_{GS}=0V, dI_F/dt=100A/μs (Note 1)	-	335	-	ns
Body Diode Reverse Recovery Charge		Q_{RR}		-	2.95	-	μC

Notes: 1. Pulse Test: Pulse width ≤ 300μs, Duty cycle ≤ 2%
2. Essentially independent of operating temperature

■ TEST CIRCUITS AND WAVEFORMS

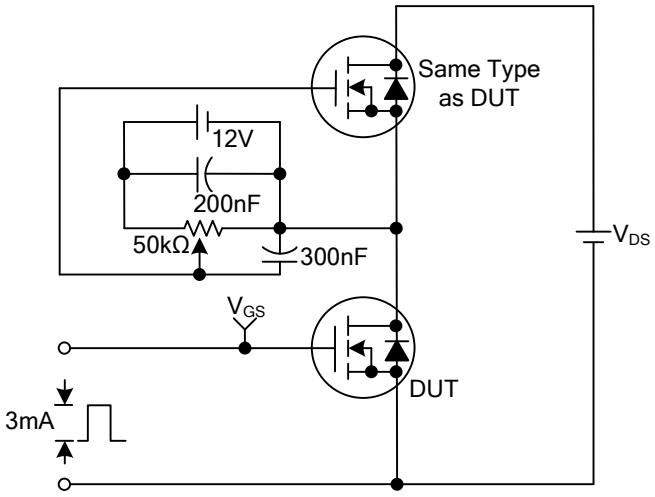

Gate Charge Test Circuit

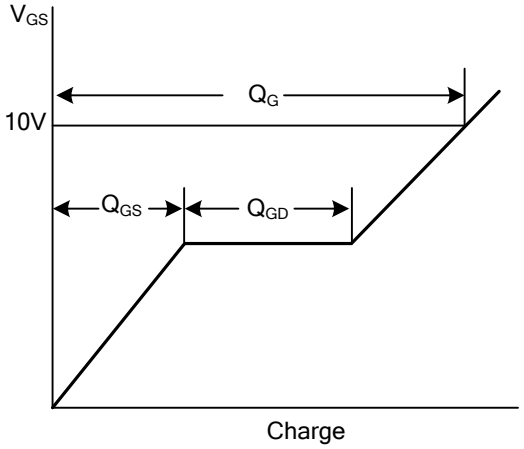

Gate Charge Waveforms

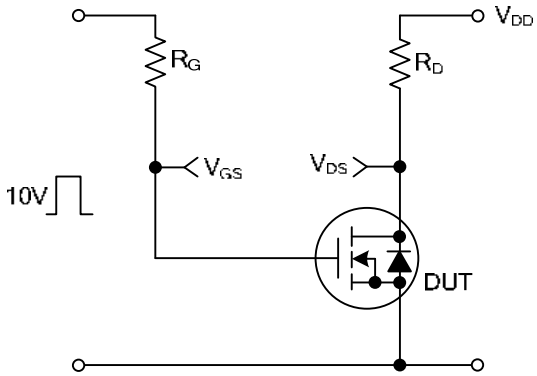

Resistive Switching Test Circuit

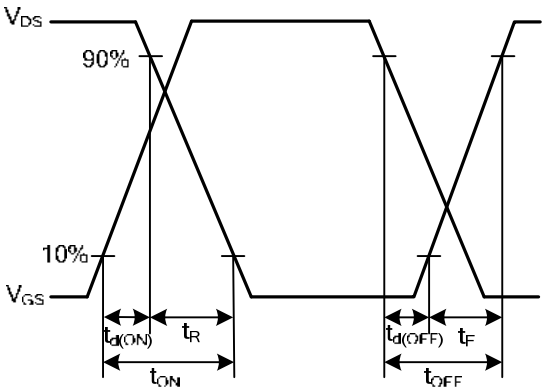

Resistive Switching Waveforms

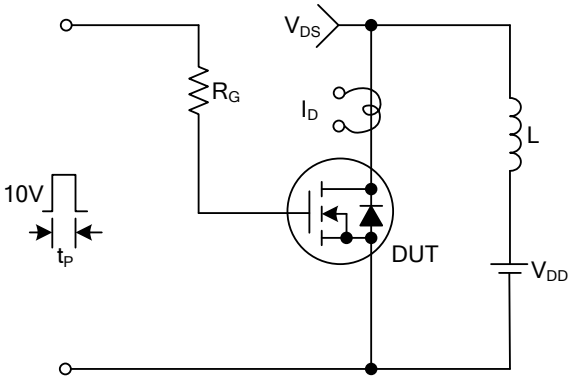

Unclamped Inductive Switching Test Circuit

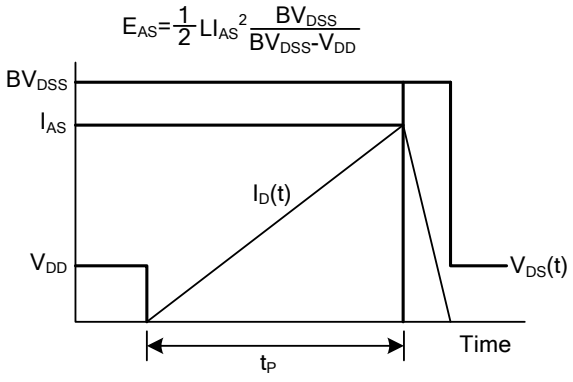

Unclamped Inductive Switching Waveforms

■ TEST CIRCUITS AND WAVEFORMS(Cont.)

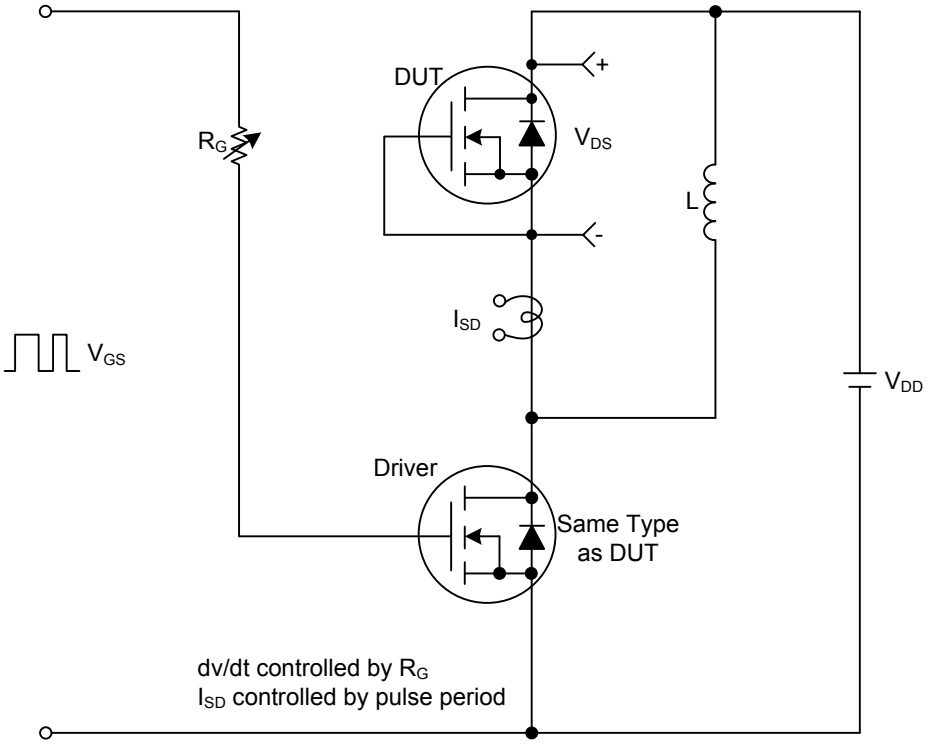

Peak Diode Recovery dv/dt Test Circuit & Waveforms

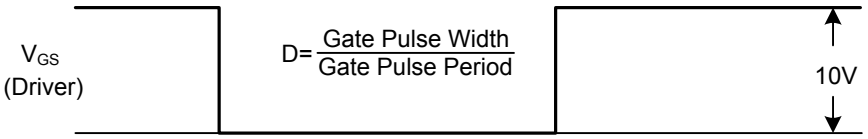

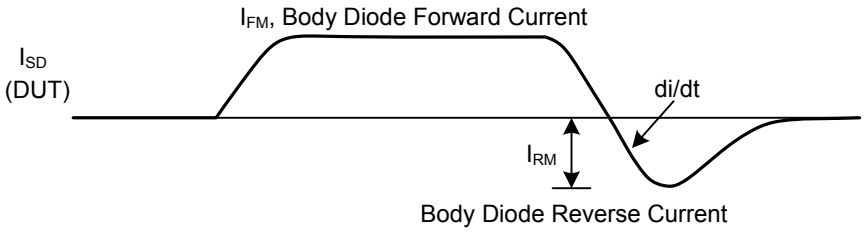

Body Diode Reverse Current

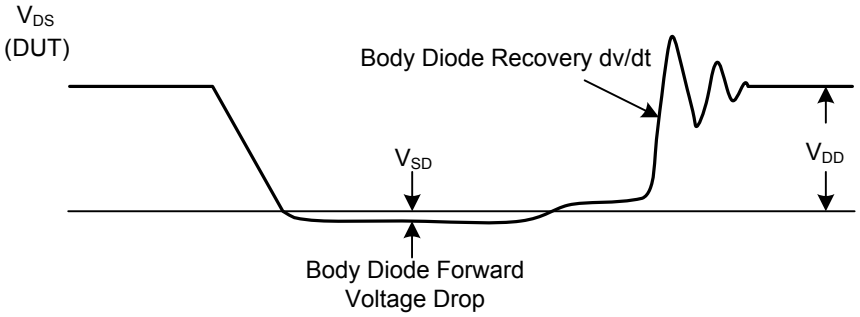

■ TO-220F PACKAGE OUTLINE DIMENSIONS

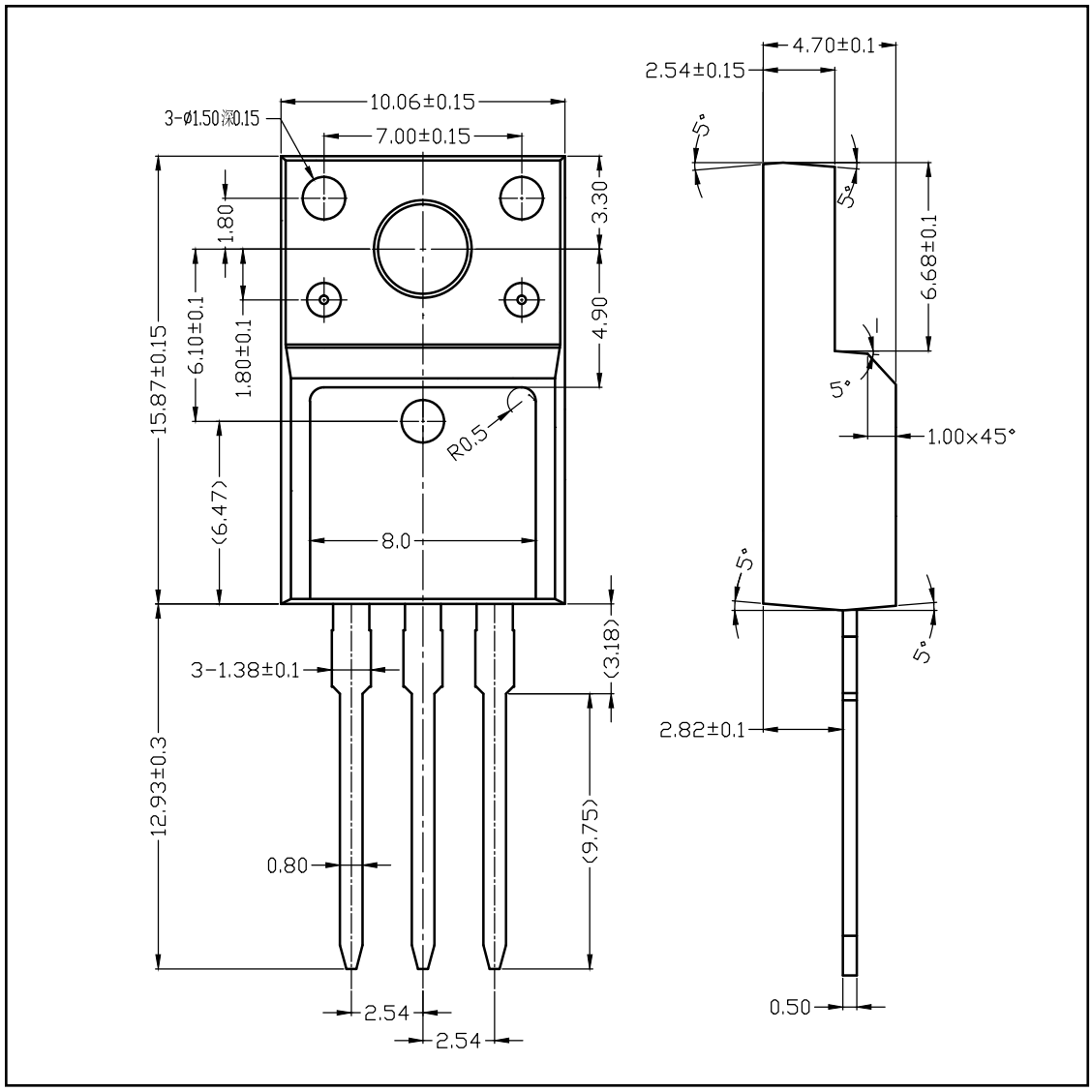

■ TO-220 PACKAGE OUTLINE DIMENSIONS

