■ PRODUCT CHARACTERISTICS

VR(@IC=0.5mA)	400V
VF(Typ@IF=8/A)	1.3V
IR(@VR=400V)	10uA
ID	16A
TRR	35nS

Symbol

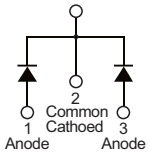

■ MECHANICAL CHARACTERISTICS

- Case: epoxy,molded
- Finish:all external surfaces corrosion resistant and terminal
- Leads are readily solderable
- Leads temperature for soldering purposes: 260°C Max for 10 seconds

■ FEATURES

- Guard ring for stress protection
- Low forward voltage
- Low power loss/high efficiency
- High surge capacity
- Low stored charge majority carrier conduction
- Pb free package are available

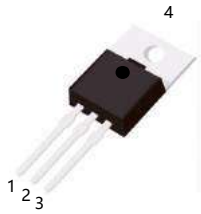

TO-220A

TO-220F

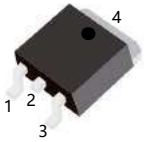

TO-263

■ ORDER INFORMATION

Order codes		Package	Packing
Halogen-free	Halogen		
N/A	MUR1640A	TO-220	50pieces/Tube
N/A	MUR1640F	TO-220F	50pieces/Tube
N/A	MUR1640E	TO-263	800pieces/Reel

■ MAXIMUM RATINGS (Each diode leg)

Parameter		Symbol	Value	Unit
Peak repetitive reverse voltage		V_{RRM}	400	V
Average rectified output current	Total	I_O	16	A
	Per leg		8	A
Non-repetitive peak forward surge current 8.3ms single half sine-wave superimposed on reate load		I_{FSM}	150	A
Operating and storage temperature range		T_J,T_{STG}	-55 to + 175	°C

■ ELECTRICAL CHARACTERISTICS

Parameter	Symbol	Conditions	Min	Typ	Max	Unit
Peak repetitive reverse voltage	B_V	I_C=0.5mA,T_J=25°C	400	-	-	V
Forward voltage drop	V_F	I_F=8A, T_J=25°C	-	1.3	1.5	V
Leakage current	I_R	V_R=400V, T_J=25°C	-	-	0.01	mA
		V_R=400V,T_J=125°C	-	-	6	
Fast recovery diode reverse recovery time	T_{RR}	Recovery time I_F=1A, dI_F/dt=200A/μs	-	-	35	nS

■ TYPICAL CHARACTERISTICS

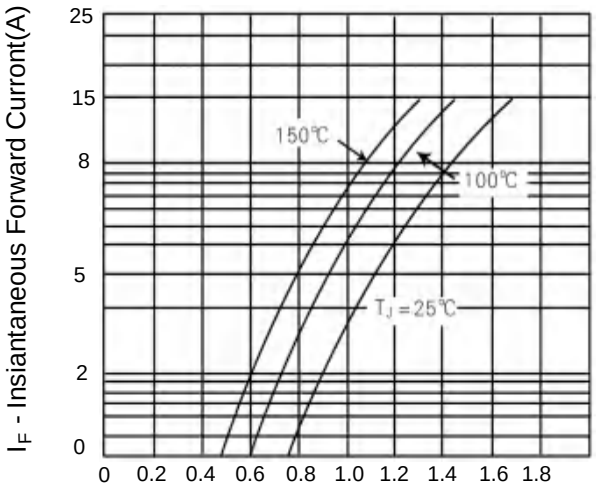

Figure 1. Typical Forward Voltage Per Diode

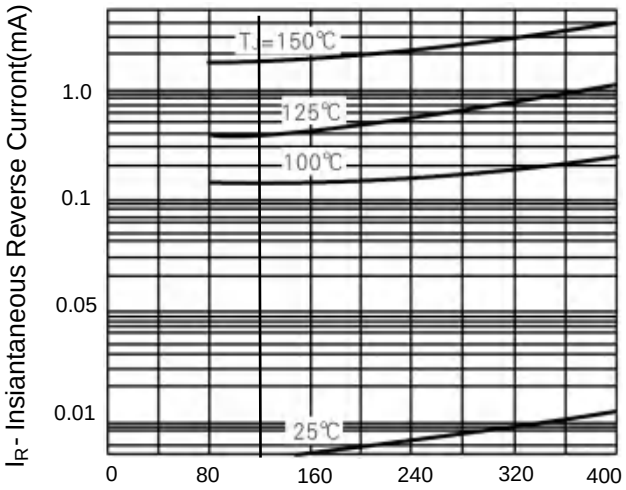

Figure 2. Typical Reverse Current Per Diode

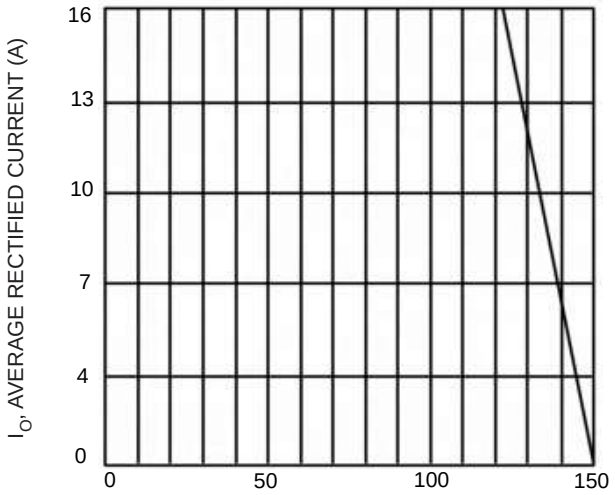

T_C,CASE TEMPERATURE(˚C)

FIGURE.3 Forward Current Derating Curve

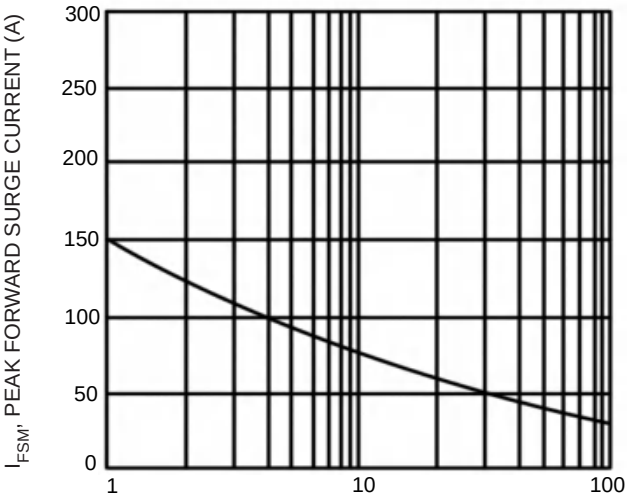

NUMBER OF CYCLES AT 60HZ

FIGURE.4 Max Non-Repetitive Surge Current

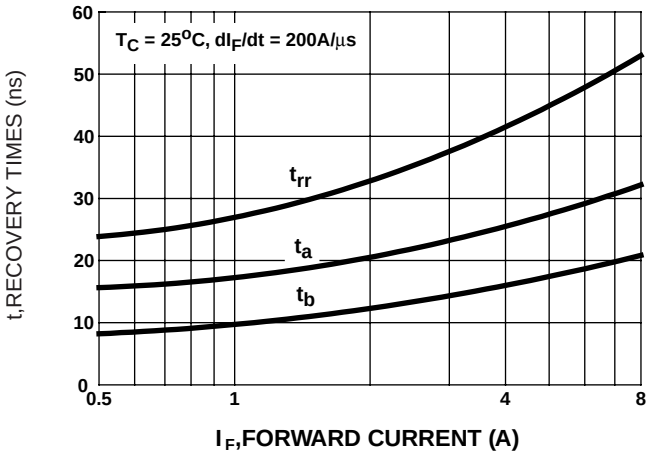

I_F,FORWARD CURRENT (A)

FIGURE.5 t_{rr},t_a AND t_b CURVES vs FORWARD CURRENT

■ TO-220F PACKAGE OUTLINE DIMENSIONS

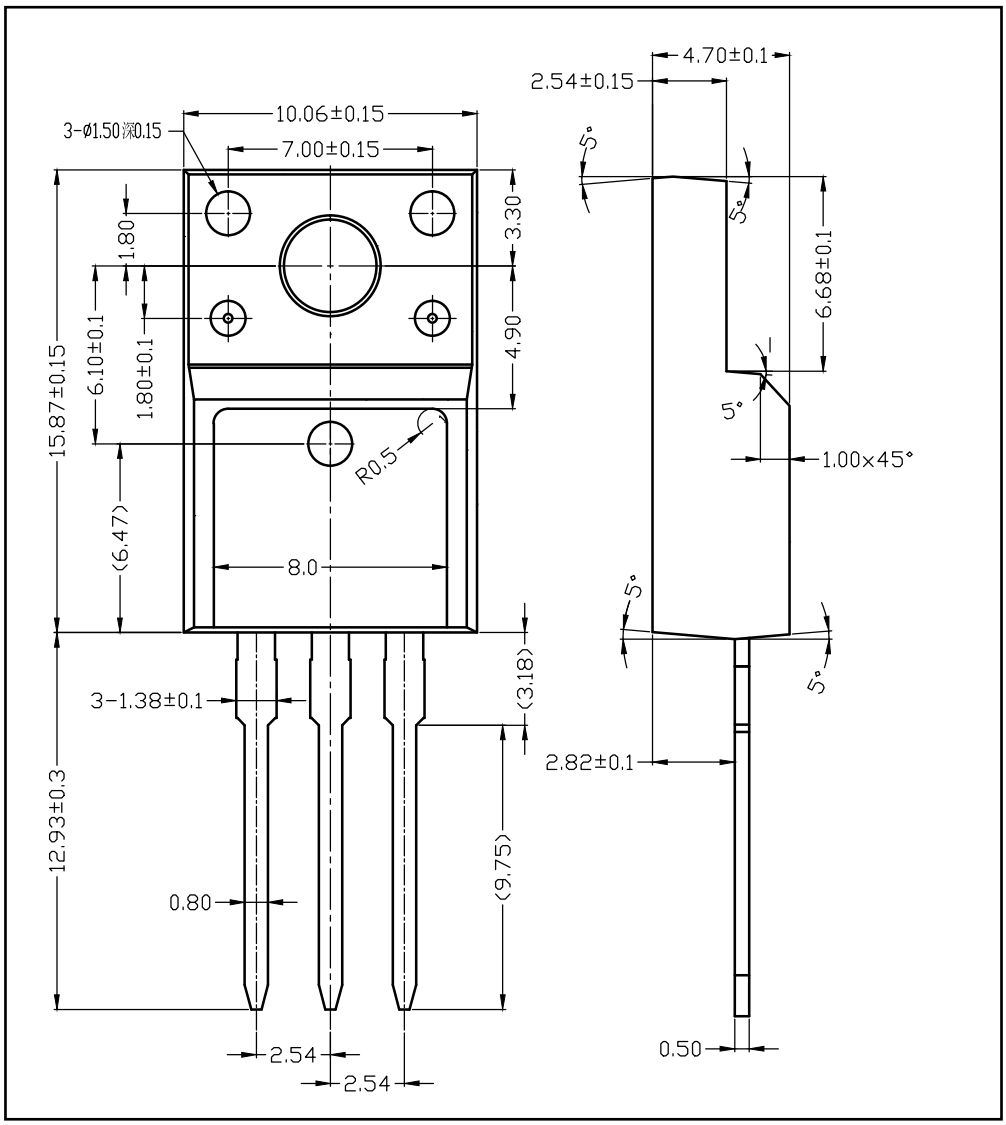

■ TO-220 PACKAGE OUTLINE DIMENSIONS

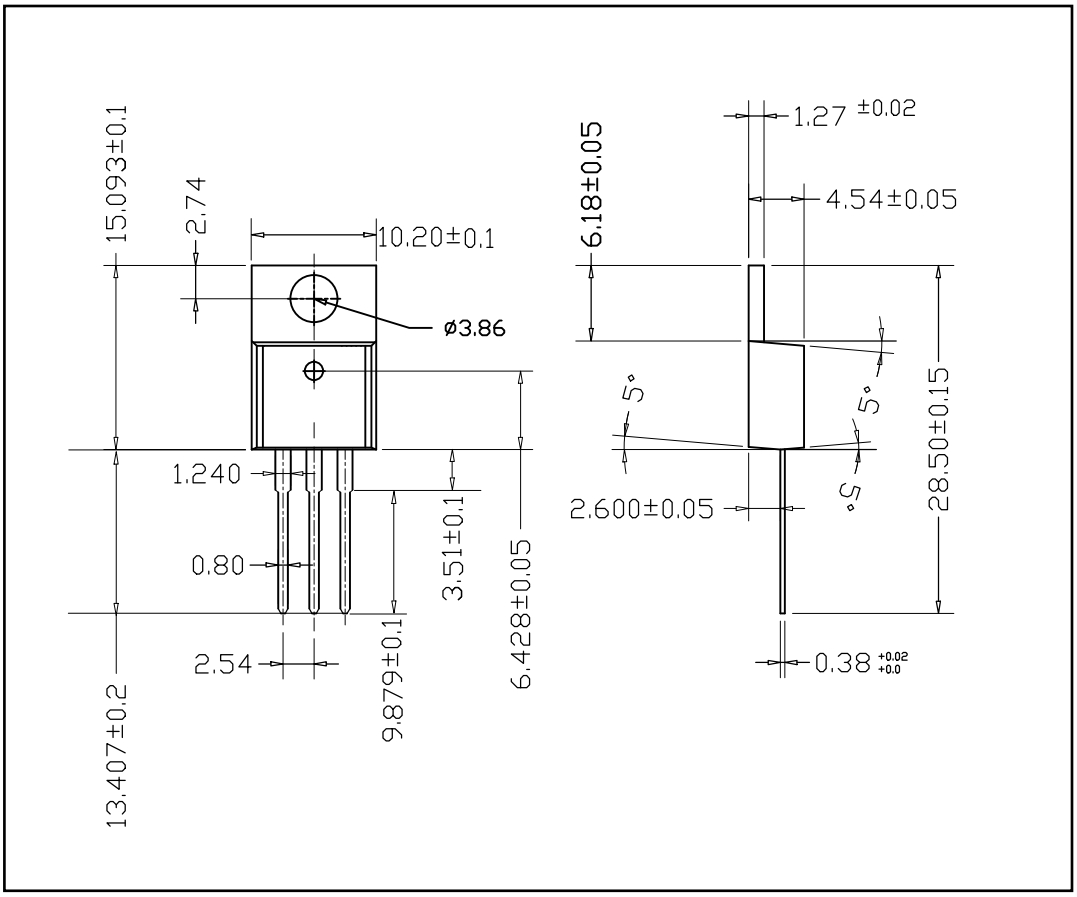
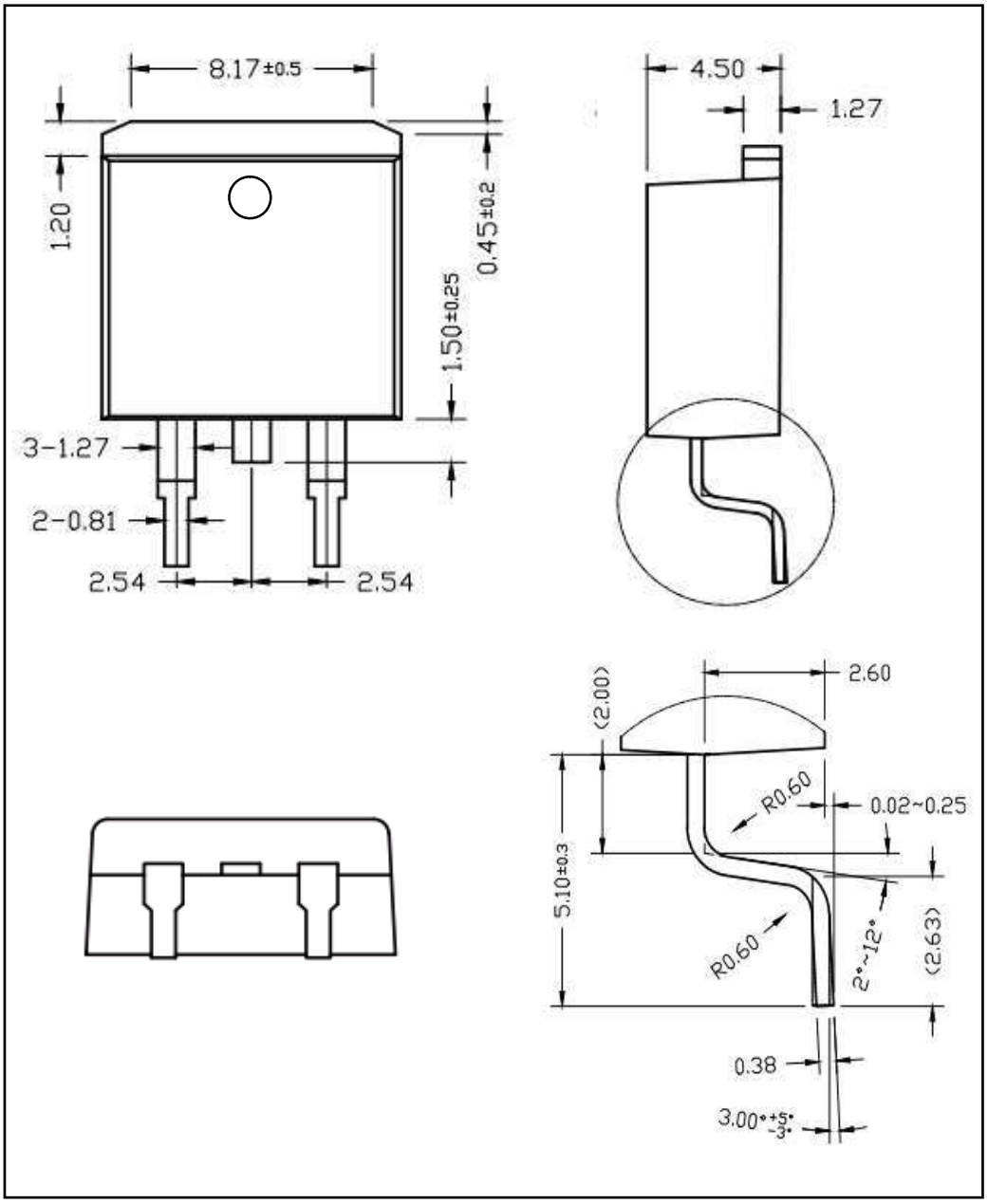
■ TO-263 PACKAGE OUTLINE DIMENSIONS